Alcohol and Marijuana Control Office
550 W 7th Avenue, Suite 1600
Anchorage, AK 99501
marijuana.licensing@alaska.gov
https://www.commerce.alaska.gov/web/amco
Phone: 907.269.0350

Alaska Marijuana Control Board

Operating Plan Supplemental

Form MJ-05: Marijuana Product Manufacturing Facility

What is this form?

This operating plan supplemental form is required for all applicants seeking a marijuana product manufacturing facility license and must accompany the **Marijuana Establishment Operating Plan (Form MJ-01)**, per 3 AAC 306.020(b)(11). Applicants should review **Chapter 306: Article 5** of the **Alaska Administrative Code.** This form will be used to document how an applicant intends to meet the requirements of those regulations. If your business has a formal operating plan, you may include a copy of that operating plan with your application, but all fields of this form must still be completed per 3 AAC 306.020 and 3 AAC 306.520(3).

What additional information is required for product manufacturing facilities?

Applicants must identify how the proposed establishment will comply with applicable regulations regarding the following:

- Prohibitions
- Equipment, compounds, and processes to be used
- Proposed marijuana concentrates and marijuana products
- Proposed product packaging and sample labels
- Waste disposal plan
- Testing

This form must be submitted to AMCO's main office before any marijuana product manufacturing facility license application will be considered complete.

Section 1 – Establishment Information

Enter information for the business seeking to be licensed, as identified on the license application.

Licensee:	GOOD LLC	**License Number:**	10165		
License Type:	Marijuana Product Manufacturing Facility				
Doing Business As:	GOOD LLC				
Premises Address:	1949 Frank Ave.				
City:	Fairbanks	**State:**	ALASKA	**ZIP:**	99708

Alcohol and Marijuana Control Office
550 W 7th Avenue, Suite 1600
Anchorage, AK 99501
marijuana.licensing@alaska.gov
https://www.commerce.alaska.gov/web/amco
Phone: 907.269.0350

Alaska Marijuana Control Board

Operating Plan Supplemental

Form MJ-05: Marijuana Product Manufacturing Facility

Section 2 – Prohibitions

Applicants should review 3 AAC 306.510 and be able to answer "Agree" to all items below.

The marijuana product manufacturing facility will not:	Agree	Disagree
Sell, deliver, distribute, or transfer any marijuana, marijuana concentrate, or a marijuana product directly to a consumer, with or without compensation	☑	☐
Allow any person, including a licensee, employee, or agent, to consume marijuana, marijuana concentrate, or a marijuana product on its licenses premises	☑	☐

The marijuana product manufacturing facility will not manufacture or sell any product that:	Agree	Disagree
Is an adulterated food or drink	☑	☐
Closely resembles a familiar food or drink item including candy	☑	☐
Is packaged to look like candy, or in bright colors or with cartoon characters or other pictures or images that would appeal to children	☑	☐

Section 3 – Equipment, Compounds, and Processes to be Used

Review the requirements under 3 AAC 306.555, and identify how the proposed premises will meet the listed requirements.

Describe the equipment and solvents, gases, chemicals, and other compounds the marijuana product manufacturing facility will use to create marijuana concentrates:

Supercritical N-Butane fluid extraction methods will be employed by the GOOD LLC, and will be conducted in an ASME-certified closed loop system and purged via vacuum oven. Butane is used for a wide variety of purposes including cooking and is a premier solvent for plant-based extractions. It is used to extract caffeine, aloe vera, and vanilla. Industries choose butane due to its unique, non-polar selectivity and low-boiling point (which makes it easier to remove from the finished product.) The FDA has listed it among the "food-safe solvents". According to the Food and Drug Administration, the generally accepted consumption rate for butane is approximately 50mg/day, which equates to approximately 5000 ppm or 0.5%. According to the Occupational Safety and Health Administration (OSHA), the permissible exposure limit for butane is 800 ppm over an eight-hour workday. Proper operation of a closed loop extraction system will keep exposure far below both of these permissible limits.
Butane is used by the marijuana industry to extraction the essential cannabinoids and terpenes from the marijuana plant into a clean, effective product. The selectivity of butane allows for the maximum retention of these plant derivatives while leaving behind unwanted carbons found in the plant material. Many edible and topical marijuana product manufacturers have converted to using butane extracted marijuana oil as the active ingredient in their products rather than raw plant material because it easier to accurately measure dosing and limits the marijuana flavor. Additionally, many marijuana users have moved from burning raw plant material and have begun vaporizing extractions exclusively, which makes these processes much more important.
Ice water extraction methods will be employed by the GOOD LLC, and will be conducted using only food-grade extraction equipment. Ice water extraction is by far the safest method for separating trichomes, which contain therapeutic cannabinoids and terpenes, from marijuana plant material in order to obtain only the resin. As resin glands are denser than water and trichomes become brittle at low temperatures, ice water and agitation are all that is needed to separate the desired resinous material from the plant material. In this process, marijuana plant material is placed in a food-grade mesh bag that is agitated in ice water, which separates trichomes from the plant material. Due to the density and size of the trichomes, they will pass through the holes in the mesh and sink to the bottom of the container. After passing the material through a series of additional mesh bags, filtering the solid content from the water used throughout the process, and pressing the resulting product to remove excess moisture, the result is pure, solvent-free marijuana resin, or hashish. See attached document "MJ-05-AdditionalInformation.pdf" for more information.

Alcohol and Marijuana Control Office
550 W 7th Avenue, Suite 1600
Anchorage, AK 99501
marijuana.licensing@alaska.gov
https://www.commerce.alaska.gov/web/amco
Phone: 907.269.0350

Alaska Marijuana Control Board

Operating Plan Supplemental
Form MJ-05: Marijuana Product Manufacturing Facility

Describe the processes to be used to create marijuana concentrates:

Pursuant to 3 AAC 306.555, GOOD LLC will utilize all marijuana plant material of acceptable quality in the production of their products. Supercritical N-Butane fluid extraction methods will be employed by the GOOD LLC, and will be conducted in an ASME-certified closed loop system and purged via vacuum oven. Ice water extraction is by far the safest method for separating trichomes, which contain therapeutic cannabinoids and terpenes, from cannabis plant material in order to obtain only the resin. As resin glands are more dense than water and trichomes become brittle at low temperatures, ice water and agitation are all that is needed to separate the desired resinous material from the plant material. In this process, cannabis plant material is placed in a mesh bag which is agitated in ice water, which separates trichomes from the plant material. Due to the density and size of the trichomes, they will pass through the holes in the mesh and sink to the bottom of the container. After passing the material through a series of mesh bags, filtering the solid content from the water used throughout the process, and pressing the resulting product to remove excess moisture, the result is pure, solvent-free cannabis resin, or hashish. Production and Process ControlGOOD LLC has developed and will continue to improve production and process control procedures, which are built in to the production procedures for each product and will be incorporated into mandatory production records. The production and process control procedures included with this application have been developed based on knowledge of and experience with effective measures for controlling variation in the production process, as described above.

Process and controls will vary depending on the product produced, but may include:
1. Pre-process inspection (and sometimes analysis) of constituents;
2. Pre-procedure documentation;
3. In-process inspection at the commencement or closing of key phases of the production process;
4. Monitoring and recording of process parameters, including:
a. Time;
b. Temperature;
c. Pressure; and
d. Speed;
5. Required random sampling, analysis, and recording of certain objective characteristics of in-process and finished products to assess conformity to specifications and consistency of the lot;
6. Calculating difference between actual and theoretical yield at key phases of the production process and for the finished product to assess whether deviation from the theoretical yield is within an acceptable range;
7. Comprehensive recording of production environment, supplies, equipment, personnel, and procedural adherence in production logs;
8. Recording of all deviations from the standard operating procedure; and
9. Post-procedure documentation.

Policies and Procedures Important Points:
1. Manufacturing agents will consult with the Manufacturing Manager about new developments in processes or procedures and will be instructed not to hesitate to ask questions when they come up;
2. All manufacturing agents will review quality control, safety and emergency procedures prior to beginning any work at the manufacturing facility;
3. Proper environmental control and monitoring is will always be maintained in the manufacturing facility;
4. The manufacturing facility will be completely cleaned and sanitized at all times;
5. Protocol will dictate that only one batch at a time will be processed and batches will never be mixed; and
6. All products will be properly labeled at all times.

Sanitation and facility requirements (ServSafe):
1. All shelving must be at least 6 inches from the floor;
2. All Stainless Steel tables must have a raised bottom shelf;
3. All manufacturing facility agents should complete the ServSafe class;
4. Manufacturing facility spaces must have a closed-loop air handling systems. If outside air must be pulled into the facility, a HEPA filter must be installed and maintained;
5. Use Germicidal Ultraviolet-C Air Purification System to combat possible airborne pathogens. This Ultraviolet Air Sanitizer uses ultraviolet light to neutralize airborne bacteria, molds, and dust mites.
6. All employees must wash hands before and after each process/task that involves work surfaces or handling product, tools, or equipment;
7. Wash hands/arms with as hot of water as you can stand (at least 100 degrees Fahrenheit), apply soap and scrub for at least 20 seconds. Make sure to get in between fingers, under nails, and up to elbow if wearing a t-shirt.
8. Always wear gloves, hair net, and facial hairnet if facial hair is longer than 1 inch;
9. Never eat or drink in production areas;
10. Clean all surfaces and utensils using Food Service's Quat Sanitizer;
11. Clean by wiping with Quat Sanitizer and a clean towel. Quat must remain on the surface for a minimum of 30 seconds to achieve sanitization;
12. All surfaces and utensils must be clean and sanitized at opening;
13. All surfaces and utensils must be cleaned and sanitized at closing;
14. Work area surfaces and utensils must be cleaned and sanitized between procedures;
15. Spray the entire work surface with Quat Sanitizer and allow it to air dry completely. Do not wipe;
16. All work surfaces and Utensils must be cleaned and sanitized before and after every use;
17. Only store products in their approved containers;
18. Keep products at least 6 inches off the floor and away from all walls;
19. Unless you're wearing gloves, do not touch utensils that come into contact with any product; and
20. Use separate utensils for each task.

Storage of Products:
1. All products must have labels with the creation date, expiration date, product description, and initials of the employee who is responsible for creating the product;
2. All infused oils must be stored below 41 degrees Fahrenheit;
3. To properly cool infused oils, place container in an ice bath to cool below 70 degrees Fahrenheit. Once below 70 degrees Fahrenheit, it is okay to move the infused oil to 41 degrees Fahrenheit for storage; and
4. All Thermometers must be calibrated daily to 32 degrees Fahrenheit:
a. To calibrate fill large container with crushed ice. Add tap water until container is full;
b. Put thermometer stem/probe into the ice water. Wait 30 seconds or until indicator stops moving; and
c. Adjust thermometer so it reads 32 degrees Fahrenheit. Only allow a 2-degree variation.

Dry Product Visual Inspection - Policy and Procedure:
1. Put on all required personal protective equipment (PPE);
2. Wash hands by following the procedure for "Washing Hands";
3. Place a sample of the delivered product on the stainless steel table in the inspection area;
4. Turn off all fans before beginning inspection process;
5. Close all doors before beginning inspection process;
6. Inspect the general appearance of the product, as well as a microscopic and odor examination for the presence of mold and other contaminants;
7. Use a black light to check for presence of mold. In the presence of mold, it will emit a fluorescent green color:
a. If mold is discovered, the entire package must be rejected and moved to quarantine immediately.
8. If the product is acceptable, fill out the Pre-Procedure Documentation Log and label product with the batch number, date received, license # of providing entity, what the product is, and what process the product will go through;
9. If processing immediately, the product being processed shall be weighed and separated, with any remaining product placed into the product storage room; and
10. Label all products with name, exact weight and batch number.

Fresh Frozen Visual Inspection - Policy and Procedure:
1. Put on all required personal protective equipment (PPE);
2. Wash hands by following the procedure for "Washing Hands";
3. Remove a 1-gram sample from the package;
4. Place sample into the quarantine refrigerator to thaw for 24 hours;
5. Place the remainder of the product into the quarantine freezer;
6. After sample has thawed, visually inspect using a black light and microscope:
a. If mold is discovered in sample (indicated by fluorescent green color when viewed under a black light), place it in the quarantine freezer with the remainder of the product in the package and immediately manifest back to client;
b. If product is approved on inspection and not being processed immediately, the agent may continue the intake process.
7. Fill out the Pre-Procedure Documentation Log and label product with the batch number, date received, license number of providing entity, what the product is, and what process the product will go through;
8. If processing immediately, the product being processed must be weighed and separated, with any remaining product placed back into freezer immediately; and
9. Label all products with name, exact weight and batch number prior to storing.
See document "MJ-05-AdditionalInformation.pdf" for more information.

Alcohol and Marijuana Control Office
550 W 7th Avenue, Suite 1600
Anchorage, AK 99501
marijuana.licensing@alaska.gov
https://www.commerce.alaska.gov/web/amco
Phone: 907.269.0350

Alaska Marijuana Control Board

Operating Plan Supplemental

Form MJ-05: Marijuana Product Manufacturing Facility

Section 4 – Proposed Marijuana Concentrates and Marijuana Products

Review the requirements under 3 AAC 306.520 - 3 AAC 306.525 and 3 AAC 306.560, and identify how the proposed establishment will meet the listed requirements. **Attach a completed copy of this page for each proposed marijuana concentrate or marijuana product.**

Product Name:	N-Butane Concentrate
Type:	Concentrate

Product Description: Details must include the color, shape, and texture.	A thick, viscous liquid that is typically golden or light amber color. The liquid is allowed to harden, which creates a smooth, glass-like substance. This substance is either processed additionally into a “wax” or measured out in its current state as “shatter” and broken into smaller, half gram or gram containers.

Ingredients: This box is not applicable to marijuana concentrates	NA

Standard Production Procedure and Detailed Manufacturing Process:	Supercritical N-Butane fluid extraction methods will be employed by the GOOD LLC, and will be conducted in an ASME-certified closed loop system and purged via vacuum oven. See document "MJ-05-AdditionalInformation.pdf" for the detailed Standard Production Procedure.

Depiction: Provide a photograph, drawing, or graphic representation of the expected appearance of the final product.	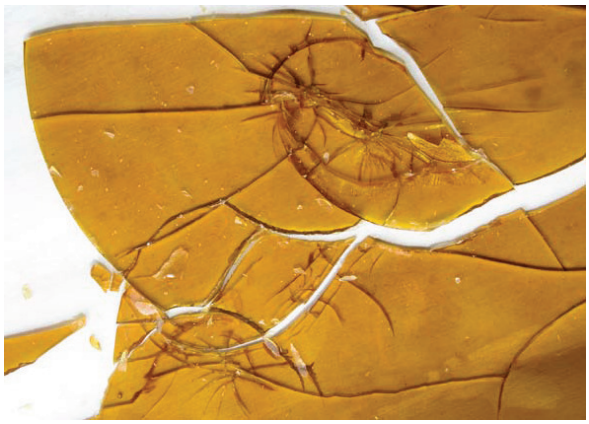

Alcohol and Marijuana Control Office
550 W 7th Avenue, Suite 1600
Anchorage, AK 99501
marijuana.licensing@alaska.gov
https://www.commerce.alaska.gov/web/amco
Phone: 907.269.0350

Alaska Marijuana Control Board

Operating Plan Supplemental

Form MJ-05: Marijuana Product Manufacturing Facility

Section 5 – Proposed Product Packaging and Sample Labels

Review the requirements under 3 AAC 306.520 and 3 AAC 306.565 – 3 AAC 306.570, and identify how the proposed establishment will meet the listed requirements. **Attach a completed copy of this page for <u>each</u> proposed marijuana concentrate or marijuana product.**

Product Name:	N-Butane Concentrate
Type:	Concentrate

Packaging Description: Details must include the color(s), size, packaging materials used, total amount of THC, individual serving sizes (if multiple), and other specifics showing compliance with 3 AAC 306.565. Attached photos, drawings, or graphic representations are preferred.	There will be two levels of packaging including direct packaging of a 7ML Acrylic Concentrate Container – Clear and a secondary child resistant packaging of Stink Sack™ Secure bags. Stink Sack™ Secure bags are classified in accordance with ASTM D3475 and are lab tested and certified using CPSC standards and protocol to conform to the requirements of a Poison Prevention Package (16 CFR 1700). See next pages for images of packaging.

Sample Labels: Provide sample labels showing how the labeling information required in 3 AAC 306.570 will be set out.	GOOD LLC - 10165 Date: _____ Agent Name: _____ Agent Registration Card No.: _____ Product Name: _____ Batch or Lot No.: _____ Testing Agency:_____ Cannabinoid Potency Profile: THC_____; THCA_____ CBD_____; CBDA_____ CBN_____ Microbial Testing Results: –Shiga-toxin producing Escherichia coli (STEC)*- Bacteria_____ Salmonella species* – Bacteria_____ Aspergillus fumigatus, Aspergillus flavus, Aspergillus niger - Fungus_____ Other(_____)_____ Solvent Testing Results: Butanes_____PPM Heptanes_____PPM Benzene_____PPM Toluene_____PPM Hexane_____PPM Total Xylenes_____PPM Mold, Mildew and Filth Testing Results: Herbicides, Pesticides and Fungicide Testing Results: Harmful Chemical Results: Contaminants Not Tested: Shipping Container Label (see below for product label)

Butane Concentrate Packaging

Section 5 – Proposed Product Packaging and Sample Labels

N-Butane Concentrate

There will be two levels of packaging including direct packaging of a 7ML Acrylic Concentrate Container – Clear and a secondary child resistant packaging of Stink Sack™ Secure bags. Stink Sack™ Secure bags are classified in accordance with ASTM D3475 and are lab tested and certified using CPSC standards and protocol to conform to the requirements of a Poison Prevention Package (16 CFR 1700).

7ML Acrylic Concentrate Container – Clear

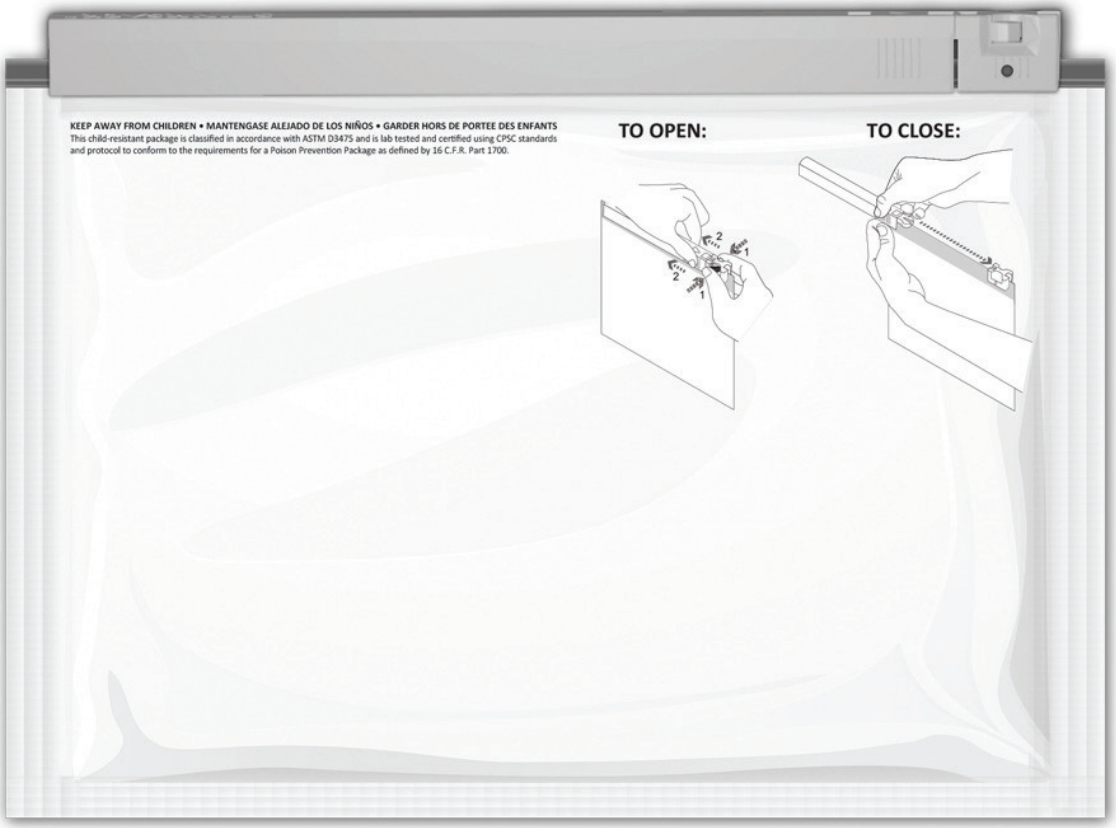

Stink Sack™ Secure bag

Butane Concentrate Packaging

7ML Acrylic Concentrate Container – Labels

Top Label

Middle Label

Bottom Label

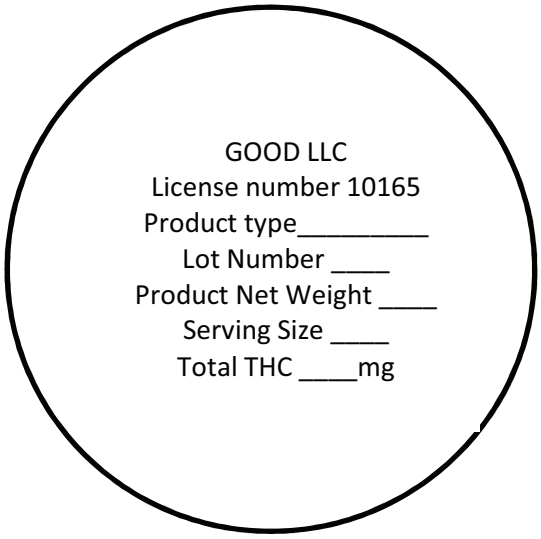

Butane Concentrate Packaging

Stink Sack™ Secure bag Labels

Alcohol and Marijuana Control Office
550 W 7th Avenue, Suite 1600
Anchorage, AK 99501
marijuana.licensing@alaska.gov
https://www.commerce.alaska.gov/web/amco
Phone: 907.269.0350

Alaska Marijuana Control Board

Operating Plan Supplemental

Form MJ-05: Marijuana Product Manufacturing Facility

Section 4 – Proposed Marijuana Concentrates and Marijuana Products

Review the requirements under 3 AAC 306.520 - 3 AAC 306.525 and 3 AAC 306.560, and identify how the proposed establishment will meet the listed requirements. **Attach a completed copy of this page for each proposed marijuana concentrate or marijuana product.**

Product Name:	Ice Water Concentrate
Type:	Concentrate

Product Description: Details must include the color, shape, and texture.	This is a solventless concentrate, typically golden or light brown in color. The consistency is similar to sand, as it appears to be grainy when finished. This substance is measured out and divided into smaller, half gram or gram containers. This is also known as “Ice Water Hash, “Bubble Hash” or “Solventless Hash,” as only water or ice is used in this process.

Ingredients: This box is not applicable to marijuana concentrates	NA

Standard Production Procedure and Detailed Manufacturing Process:	Ice water extraction is by far the safest method for separating trichomes, which contain therapeutic cannabinoids and terpenes, from marijuana plant material in order to obtain only the resin. As resin glands are denser than water and trichomes become brittle at low temperatures, ice water and agitation are all that is needed to separate the desired resinous material from the plant material. In this process, marijuana plant material is placed in a food-grade mesh bag that is agitated in ice water, which separates trichomes from the plant material. Due to the density and size of the trichomes, they will pass through the holes in the mesh and sink to the bottom of the container. After passing the material through a series of additional mesh bags, filtering the solid content from the water used throughout the process, and pressing the resulting product to remove excess moisture, the result is pure, solvent-free marijuana resin, or hashish."MJ-05-AdditionalInformation.pdf" for the detailed Standard Production Procedure.

Depiction: Provide a photograph, drawing, or graphic representation of the expected appearance of the final product.	

Alcohol and Marijuana Control Office
550 W 7th Avenue, Suite 1600
Anchorage, AK 99501
marijuana.licensing@alaska.gov
https://www.commerce.alaska.gov/web/amco
Phone: 907.269.0350

Alaska Marijuana Control Board

Operating Plan Supplemental

Form MJ-05: Marijuana Product Manufacturing Facility

Section 5 – Proposed Product Packaging and Sample Labels

Review the requirements under 3 AAC 306.520 and 3 AAC 306.565 – 3 AAC 306.570, and identify how the proposed establishment will meet the listed requirements. **Attach a completed copy of this page for <u>each</u> proposed marijuana concentrate or marijuana product.**

Product Name:	Ice Water Concentrate
Type:	Concentrate

Packaging Description: Details must include the color(s), size, packaging materials used, total amount of THC, individual serving sizes (if multiple), and other specifics showing compliance with 3 AAC 306.565. Attached photos, drawings, or graphic representations are preferred.	There will be two levels of packaging including direct packaging of a 7ML Acrylic Concentrate Container – Clear and a secondary child resistant packaging of Stink Sack™ Secure bags. Stink Sack™ Secure bags are classified in accordance with ASTM D3475 and are lab tested and certified using CPSC standards and protocol to conform to the requirements of a Poison Prevention Package (16 CFR 1700). See next pages for images of packaging.

Sample Labels: Provide sample labels showing how the labeling information required in 3 AAC 306.570 will be set out.	GOOD LLC - 10165 Date: _____ Agent Name: _____ Agent Registration Card No.: _____ Product Name: _____ Batch or Lot No.: _____ Testing Agency:_____ Cannabinoid Potency Profile: THC_____; THCA_____ CBD_____; CBDA_____ CBN_____ Microbial Testing Results: –Shiga-toxin producing Escherichia coli (STEC)*- Bacteria_____ Salmonella species* – Bacteria_____ Aspergillus fumigatus, Aspergillus flavus, Aspergillus niger - Fungus_____ Other(_____)_____ Solvent Testing Results: Butanes_____PPM Heptanes_____PPM Benzene_____PPM Toluene_____PPM Hexane_____PPM Total Xylenes_____PPM Mold, Mildew and Filth Testing Results: Herbicides, Pesticides and Fungicide Testing Results: Harmful Chemical Results: Contaminants Not Tested: Shipping Container Label (see below for product label)

Section 5 – Proposed Product Packaging and Sample Labels

Ice Water Concentrate

There will be two levels of packaging including direct packaging of a 7ML Acrylic Concentrate Container – Clear and a secondary child resistant packaging of Stink Sack™ Secure bags. Stink Sack™ Secure bags are classified in accordance with ASTM D3475 and are lab tested and certified using CPSC standards and protocol to conform to the requirements of a Poison Prevention Package (16 CFR 1700).

7ML Acrylic Concentrate Container – Clear

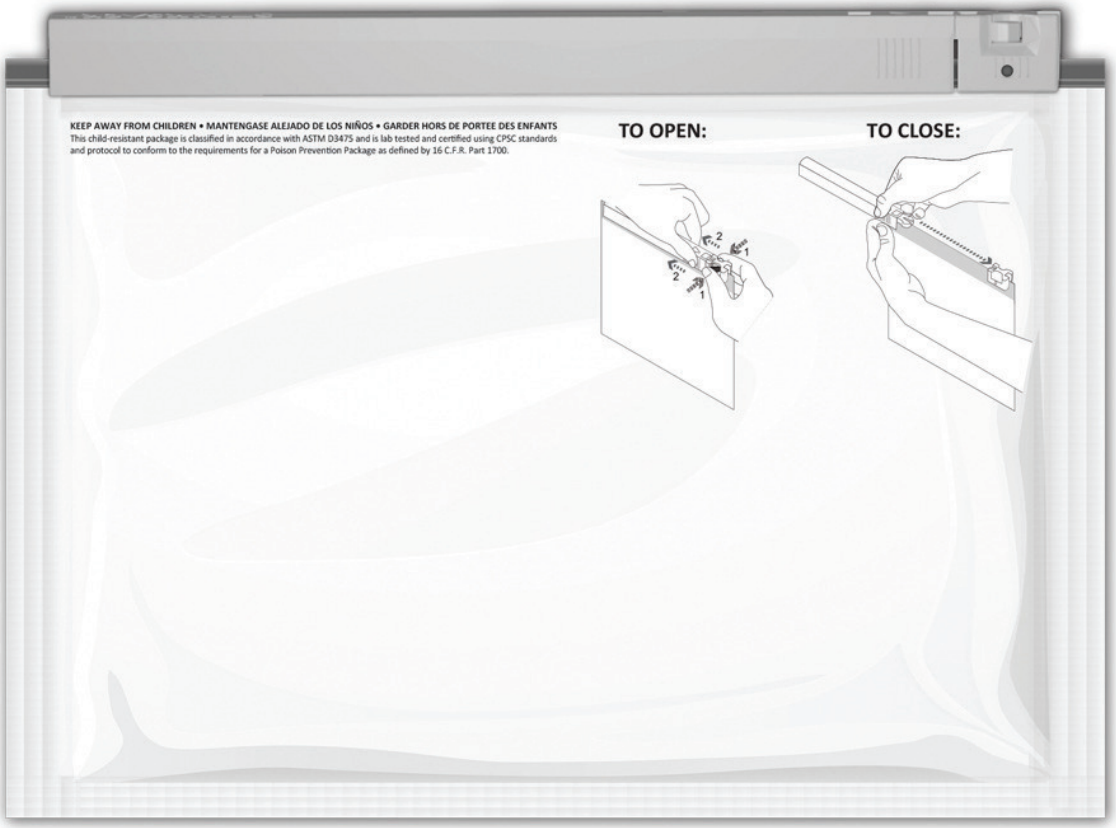

Stink Sack™ Secure bag

Ice Water Concentrate Packaging

7ML Acrylic Concentrate Container – Labels

Top Label

Middle Label

Bottom Label

GOOD LLC
License number 10165
Product type_____
Lot Number ____
Product Net Weight ____
Serving Size ____
Total THC ____mg

Ice Water Concentrate Packaging

Stink Sack™ Secure bag Labels

Alcohol and Marijuana Control Office
550 W 7th Avenue, Suite 1600
Anchorage, AK 99501
marijuana.licensing@alaska.gov
https://www.commerce.alaska.gov/web/amco
Phone: 907.269.0350

Alaska Marijuana Control Board

Operating Plan Supplemental

Form MJ-05: Marijuana Product Manufacturing Facility

Section 4 – Proposed Marijuana Concentrates and Marijuana Products

Review the requirements under 3 AAC 306.520 - 3 AAC 306.525 and 3 AAC 306.560, and identify how the proposed establishment will meet the listed requirements. **Attach a completed copy of this page for each proposed marijuana concentrate or marijuana product.**

Product Name:	Vape Pen with Oil
Type:	Concentrate: Butane Extract

Product Description: Details must include the color, shape, and texture.	This product is meant to be vaporized in individual cartridge, where the battery is attached and a heating element within the cartridge creates a vaporized product. The oil is typically light to dark brown, depending on the marijuana flower product used to create it.

Ingredients: This box is not applicable to marijuana concentrates	NA

Standard Production Procedure and Detailed Manufacturing Process:	Manual processing 1. Verify the concentrate product has been tested and the cannabinoid levels are documented. The concentrate must be decarboxylated prior to use. 2. Start by putting on all safety equipment. (Gloves, hairnet, beard net) 3. Inspect, clean and prepare any equipment as necessary. 4. Determine the dosage of the oil to be added to each vape pen (generally it is 3 parts oil to 1 part polyethylene glycol 400, but you may adjust according to the dosage level that you want). 5. Homogenize the mixture using a CAT X120 or other appropriate device. 6. Add the mixture to the cartridges (containers that attach to the battery) using the HandyStep Pipette S. 7. Place the filled cartridges in the holding tray and place it in the designated storage area. 8. Measure the amount of doses and enter all numbers in the ADP/POS or other inventory tracking software. 9. Wash and clean all the equipment that was used and wipe down the workstation and finish any cleaning or sanitary requirements. See document "MJ-05-AdditionalInformation.pdf" for more information.

Depiction: Provide a photograph, drawing, or graphic representation of the expected appearance of the final product.	

Alcohol and Marijuana Control Office
550 W 7th Avenue, Suite 1600
Anchorage, AK 99501
marijuana.licensing@alaska.gov
https://www.commerce.alaska.gov/web/amco
Phone: 907.269.0350

Alaska Marijuana Control Board

Operating Plan Supplemental

Form MJ-05: Marijuana Product Manufacturing Facility

Section 5 – Proposed Product Packaging and Sample Labels

Review the requirements under 3 AAC 306.520 and 3 AAC 306.565 – 3 AAC 306.570, and identify how the proposed establishment will meet the listed requirements. **Attach a completed copy of this page for <u>each</u> proposed marijuana concentrate or marijuana product.**

Product Name:	Vape Pen
Type:	Concentrate: Butane Extract

Packaging Description: Details must include the color(s), size, packaging materials used, total amount of THC, individual serving sizes (if multiple), and other specifics showing compliance with 3 AAC 306.565. Attached photos, drawings, or graphic representations are preferred.	Vape pen cartridges will be packaged in two levels of packaging including plastic tubes (immediate packaging) in child resistant Stink Sack™ Secure bags as secondary packaging. Stink Sack™ Secure bags are classified in accordance with ASTM D3475 and are lab tested and certified using CPSC standards and protocol to conform to the requirements of a Poison Prevention Package (16 CFR 1700). See next pages for images of packaging.

Sample Labels: Provide sample labels showing how the labeling information required in 3 AAC 306.570 will be set out.	GOOD LLC - 10165 Date: _____ Agent Name: _____ Agent Registration Card No.: _____ Product Name: _____ Batch or Lot No.: _____ Testing Agency:_____ Cannabinoid Potency Profile: THC_____; THCA_____ CBD_____; CBDA_____ CBN_____ Microbial Testing Results: –Shiga-toxin producing Escherichia coli (STEC)*- Bacteria_____ Salmonella species* – Bacteria_____ Aspergillus fumigatus, Aspergillus flavus, Aspergillus niger - Fungus_____ Other(_____)_____ Solvent Testing Results: Butanes_____PPM Heptanes_____PPM Benzene_____PPM Toluene_____PPM Hexane_____PPM Total Xylenes_____PPM Mold, Mildew and Filth Testing Results: Herbicides, Pesticides and Fungicide Testing Results: Harmful Chemical Results: Contaminants Not Tested: Shipping Container Label (see below for product label)

Vape Pen Packaging

Section 5 – Proposed Product Packaging and Sample Labels

Vape pen

Pre-loaded vape pen cartridges will be packaged plastic tubes which will be placed in placed in child resistant Stink Sack™ Secure bags. Stink Sack™ Secure bags are classified in accordance with ASTM D3475 and are lab tested and certified using CPSC standards and protocol to conform to the requirements of a Poison Prevention Package (16 CFR 1700). A sticker that

Vape Pen Labels

Vape Pen Packaging

Plastic Tube Example

GOOD LLC
License number 10165
Product type_____
Lot Number ____
Product Net Weight ____
Serving Size ____
Total THC ____mg

Tube Sticker Label

Plastic Tube Branding Labels

Vape Pen Packaging

Stink Sack™ Secure bag branding labels

Stink Sack™ Secure bag

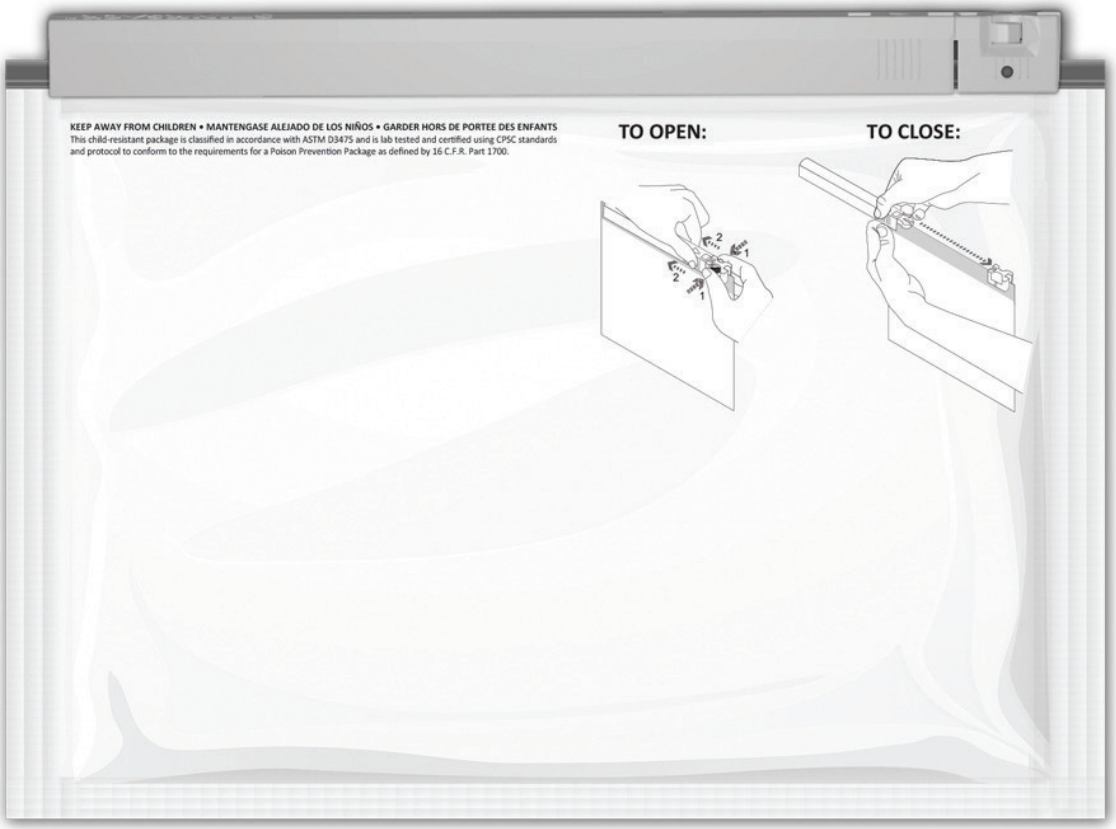

Alcohol and Marijuana Control Office
550 W 7th Avenue, Suite 1600
Anchorage, AK 99501
marijuana.licensing@alaska.gov
https://www.commerce.alaska.gov/web/amco
Phone: 907.269.0350

Alaska Marijuana Control Board

Operating Plan Supplemental

Form MJ-05: Marijuana Product Manufacturing Facility

Section 6 – Waste Disposal Plan

Review the requirements under 3 AAC 306.520, and identify how the proposed premises will meet the listed requirements.

Describe the marijuana product manufacturing facility's plan for disposal of any expired or outdated marijuana or marijuana product that is not sold or transferred to another licensed marijuana establishment:

Pursuant to 3 AAC 306.520, GOOD LLC has developed written standard operating procedures ("SOPs"), incorporating Good Manufacturing and Handling Practices, which require the disposal and segregated storage of any marijuana that is expired, outdated, damaged, deteriorated, misbranded, or adulterated ("affected"). The manufacturing facility Product Manufacturing Manager, in coordination with the Compliance Committee and Inventory Manager will be responsible for quarantining, arranging inspections with the Quality Control Team ("QCT"), adjusting inventory within the Automated Data Processing System ("ADPS") and authorizing destruction and disposal of any affected marijuana.
All expired or outdated marijuana and marijuana product will be ground, rendered unusable and incorporated with non-marijuana, compostable waste until the mixture contains less than 50% of marijuana product material. Non-marijuana waste will be added to ground marijuana waste until the mixture contains more than 50% of non-marijuana waste. Non-marijuana compostable waste used will primarily be used media (cocoa fibers, earthworm castings, etc) used to grow marijuana plants. When enough used grow media is unavailable, GOOD LLC will use Bokashi Compost to render all waste marijuana and marijuana products unusable. Waste will be mixed using a Poly Scoop shovel to ensure the marijuana waste is rendered unusable and unrecognizable. After being rendered unusable, mixed marijuana waste will be securely stored until it is transported by a local compost company, who will remove all destroyed waste mixture from the licensed premises on a weekly basis for disposal by composting. Each production agent will receive training in order to ensure the proper disposal of expired or outdated marijuana or marijuana product waste is in accordance with GOOD LLC's policies. Each production agent will be required to check the automatic data processing/point-of-sale system and relevant internal logs to determine the recordkeeping requirements for marijuana waste disposal. Each waste container containing marijuana waste will be individually weighed. Agents will properly store all marijuana waste after it has been recorded and documented to Secure Waste Storage.

1. GOOD LLC will not produce or maintain quantities of marijuana products in excess of what is needed for normal, efficient operation and to meet the needs of customers who obtain their products from GOOD LLC's retail facility and other licensees.
2. Prior to disposal, marijuana waste will be securely stored in a locked compartment that is located in an area under video surveillance and kept quarantined from all usable derivative products, marijuana plant material, or in process materials in order to prevent contamination.
3. Prior to disposal, marijuana waste will be rendered unusable.
4. After being rendered unusable, mixed marijuana waste will be securely stored until it is transported by an approved hauler to an approved compost facility. Non-compostable materials including paper waste, cardboard waste, plastic waste, oil, or other wastes approved by the board when the mixed material may be delivered to a permitted solid waste facility, incinerator, or other facility with approval of any applicable local government entity.
5. GOOD LLC will give the board at least 3 days notice in the marijuana inventory tracking system required under 3 AAC 306.730 before making the waste unusable and disposing of it; except that the director may authorize immediate disposal on an emergency basis. GOOD LLC will keep a record of the final destination of marijuana waste made unusable.
6. The secure area used for the storage and mixing of marijuana waste will be securely locked and protected from unauthorized entry, other than during the time required to move or render marijuana unusable, or prepare mixed waste for transport to the specified disposal facility.
7. Marijuana waste will be stored and disposed of in a manner that minimizes the development of odors that could present a public nuisance.
8. Marijuana waste will be stored and disposed of in a manner that minimizes the potential for such waste to attract, harbor, or become a breeding place for pests.
9. Marijuana waste will be stored and disposed of in a manner that protects against contamination of marijuana derivative products, contact surfaces, production areas, water supplies, and grounds surrounding the facility.
10. Marijuana waste will be stored and disposed of in a manner that prevents diversion, theft, or loss of marijuana plant material and derivative products.
11. Marijuana waste will be stored and disposed of in a manner that ensures traceability through internal documentation and real-time electronic tracking in the ADPS.
12. All marijuana waste on the premises of the manufacturing facility will be stored in a secured and locked container within an area covered by continuous video surveillance.
13. All marijuana waste and waste disposal activities will be recorded in GOOD LLC's ADPS and in GOOD LLC's internal Waste Disposal Log. These records will be maintained in an electronic format for a five (5) year period and will be made available for inspection upon request by the Department, and, when necessary for investigative purposes by law enforcement agencies.

CP 10/24/16

Alcohol and Marijuana Control Office
550 W 7th Avenue, Suite 1600
Anchorage, AK 99501
marijuana.licensing@alaska.gov
https://www.commerce.alaska.gov/web/amco
Phone: 907.269.0350

Alaska Marijuana Control Board

Operating Plan Supplemental

Form MJ-05: Marijuana Product Manufacturing Facility

Section 7 – Testing

	Yes	No
The area where in-house testing will occur must be identified on the premises diagram, per 3 AAC 306.520(2).		
Will the marijuana product manufacturing facility perform in-house testing (as defined in 3 AAC 306.990(b)(20))?	☒	

Applicants should review 3 AAC 306.550 and be able to answer "Agree" to the item below.

The marijuana cultivation facility applicant has:	Agree	Disagree
Read and understands and agrees to the required laboratory testing set forth in 3 AAC 306.550	☒	☐

I declare under penalty of perjury that I have examined this form, including all accompanying schedules and statements, and to the best of my knowledge and belief find it to be true, correct, and complete.

Signature of licensee

CHRISTIAN HOOD
Printed name

Subscribed and sworn to before me this 12th day of August, 2016.

NICK AKERS
My Commission Expires
NOTARY PUBLIC
Jun 12, 2019
STATE OF ALASKA

Notary Public in and for the State of Alaska.

My commission expires: 6/12/19

Manufacturing Application

Form 05: Marijuana Product Manufacturing Facility

Describe the equipment and solvents, gases, chemicals, and other compounds the marijuana product manufacturing facility will use to create marijuana concentrate:

Pursuant to 3 AAC 306.555, GOOD LLC will create a variety of marijuana derivative products with various routes of administration using decarboxylated extract as the source derivative product input. By using a supercritical extraction machine and applying the right amount of pressure, temperature and time, the butane being used by GOOD LLC will strip compounds from the marijuana plant and collect the essential cannabinoids and terpenes necessary to produce marijuana manufactured products. GOOD LLC will utilize all marijuana by-product of acceptable quality in the production of their products. Marijuana oil will be available to customers in a pre-dosed, ready-to-use form and in further processed forms, or "manufactured products" contained herein. The manufacturing facility Product Manufacturing Manager ("Product Manufacturing Manager") will review quality control, safety and emergency procedures, sanitary conditions and cleanliness and environmental controls prior to beginning production procedures at the manufacturing facility.

Supercritical N-Butane fluid extraction methods will be employed by the GOOD LLC, and will be conducted in an ASME-certified closed loop system and purged via vacuum oven. Butane is used for a wide variety of purposes including cooking and is a premier solvent for plant-based extractions. It is used to extract caffeine, aloe vera, and vanilla. Industries choose butane due to its unique, non-polar selectivity and low-boiling point (which makes it easier to remove from the finished product.) The FDA has listed it among the "food-safe solvents". According to the Food and Drug Administration, the generally accepted consumption rate for butane is approximately 50mg/day, which equates to approximately 5000 ppm or 0.5%. According to the Occupational Safety and Health Administration (OSHA), the permissible exposure limit for butane is 800 ppm over an eight-hour workday. Proper operation of a closed loop extraction system will keep exposure far below both of these permissible limits.

Butane is used by the marijuana industry to extraction the essential cannabinoids and terpenes from the marijuana plant into a clean, effective product. The selectivity of butane allows for the maximum retention of these plant derivatives while leaving behind unwanted carbons found in the plant material. Many edible and topical marijuana product manufacturers have converted to using butane extracted marijuana oil as the active ingredient in their products rather than raw plant material because it easier to accurately measure dosing and limits the marijuana flavor. Additionally, many marijuana users have moved from burning raw plant material and have begun vaporizing extractions exclusively, which makes these processes much more important.

Ice water extraction methods will be employed by the GOOD LLC, and will be conducted using only food-grade extraction equipment. Ice water extraction is by far the safest method for separating trichomes, which contain therapeutic cannabinoids and terpenes, from marijuana plant material in order to obtain only the resin. As resin glands are denser than water and trichomes become brittle at low temperatures, ice water and agitation are all that is needed to separate the desired resinous material from the plant

material. In this process, marijuana plant material is placed in a food-grade mesh bag that is agitated in ice water, which separates trichomes from the plant material. Due to the density and size of the trichomes, they will pass through the holes in the mesh and sink to the bottom of the container. After passing the material through a series of additional mesh bags, filtering the solid content from the water used throughout the process, and pressing the resulting product to remove excess moisture, the result is pure, solvent-free marijuana resin, or hashish.

Decarboxylation

The essential process of heating marijuana in order to activate cannabinoids for their medicinal effects to be attainable through oral or topical consumption is called decarboxylation, which is the conversion of cannabinoids from their acidic state to an active state. The Product Manufacturing Manager will ensure that all marijuana extract is appropriately decarboxylated prior to being used in the production of marijuana manufactured products. Marijuana produces phyto-cannabinoids in a carboxylic acid form that are not orally or topically active at the CB-1 receptor sites, because they don't readily pass the blood brain barrier in their polar form. To enable them to pass the blood brain barrier, they must first be decarboxylated, to remove the COOH carboxyl group of atoms, which exits in the form of H_2O and CO_2.

GOOD LLC will produce marijuana manufactured products and maintain its manufacturing facility in compliance with cGMPs, and will use decarboxylated extract in all of its production procedures. Batches are carefully tracked, labeled, and packaged in accordance with state laws and regulations, GOOD LLC policies and any requirements set forth by the Board.

The Product Manufacturing Manager will review quality control, safety and emergency procedures, sanitary conditions and cleanliness and environmental controls prior to beginning any production procedures at the manufacturing facility. The Product Manufacturing Manager will also ensure that all products are properly labeled at all times throughout the production process, and coordinate with the Inventory Manager and Packaging Manager to make sure that all finished manufactured products are packaged properly prior to being placed in storage or transported to a retail facility for sale to customers.

Any information will be used as a guideline for the Product Manufacturing Manager to develop processes that will be validated by testing. All trials and test results will be documented and used to improve GOOD LLC methodologies and recipes.

GOOD LLC will extract cannabinoids from mature marijuana flower using the three extraction methods and solvents outlined below. Because cannabinoids are not water soluble, cannabinoids must be dissolved in a solvent or agitated to allow extraction. GOOD LLC will only utilize marijuana of acceptable quality in the production of marijuana concentrates and infused products.

Extraction Methods

Two extraction methods will be employed by GOOD LLC:

1. Ice-water separation:

a. Cannabinoids can be extracted by using purified water and ice in food-grade agitation equipment to separate resin glands from plant material;

b. Processed marijuana may undergo additional processing to mitigate low yields from water extraction; and

c. This water-based, solvent-less process results in residual-free marijuana concentrate.

2. Butane extraction:

   a. Butane solvent in an ASME certified closed loop system and purged via vacuum oven;

   b. Retains high level of whole plant compounds, including cannabinoids and terpenes;

   c. Results in high quality oil from lower grade by-product; and

   d. Allows for some ability to selectively extract targeted cannabinoids and terpenes allowing for the production of consistent and specific product types.

LP Gas Storage Requirements

GOOD LLC will review and comply with all state and local requirements. "Maximum Allowable Quantity per Control Area of Hazardous Materials Posing a Physical Hazard." GOOD LLC will also follow safety standards set by the National Fire Protection Association ("NFPA"), the International Fire Code ("IFC"), and the International Building Code ("IBC").

<u>Storage Requirements</u>

1. Compressed gas containers, cylinders and tanks, whether full or partially full, shall not be exposed to high temperatures exceeding 125°F (52°C) or sub-ambient (low) temperatures unless designed for use under the exposed conditions.
2. Transfer of gases between containers, cylinders, and tanks shall be performed by qualified personnel using equipment and operating procedures in accordance with CGA P-1 (Compressed Gas Association P-1: Safe Handling of Compressed Gases).
3. The extraction solvent (Butane) shall be stored, used, and handled in accordance with the Safety Data Sheets (SDS), which are required as postings in the control area.
4. Portable compressed gas containers shall be marked in accordance with CGA C-7 and shall be stored upright.
5. Areas used for storage, use, and handling of compressed gas containers shall be secured against unauthorized access and physical damage.
6. Compressed gas containers shall be separated from hazardous conditions including combustible materials, extreme temperatures, falling objects, and sources of ignition (e.g. open flames, hot plates and electrical components).
7. The total quantity of flammable liquid allowed within the facility is limited to 30 gallons and shall be stored in flammable liquid cabinets.
8. The facility must store one master source tank (or mother tank) outside of the facility in a secure area (locked cage), and smaller tanks must be used to fill outside and transferred back inside for use. This will ensure that only quantities that are needed for production within the same day will be inside the production area at any time. This tank must be stored in an appropriate lockable ventilated enclosure of metal exterior construction for outside storage of LP-Gas tanks and provide vehicle collision protection around the storage areas (i.e. bollards). In addition, LP-Gas must be stored a minimum of 10 feet from all building entrances/exits, HVAC ventilation

intakes, and sidewalks.

9. The GOOD LLC will always store containers in an upright position. The portable compressed gas containers must be physically separated by a minimum of 10 feet from hazardous conditions (i.e., combustibles, storage, racks, electrical equipment, falling objects, etc.).
10. Flammable liquids must be separated from the designated extraction area and stored in the flammable liquids cabinet with a limited quantity of 30 gallons or less.

Extraction Facility Specifications

1. Hazard Diamond sign (see below) and 'No Smoking' signs are posted on the exterior of the solvent extraction room door and the exterior door of the building.

a.

Figure 1 Example: Butane (See MSDS for exact hazard rating)

2. Piping that can contain liquid LP-Gas and that can be isolated by valving shall have an operating pressure of 350 psig (NFPA 58: 5.9.1.4).

3. A hydrostatic relief valve or a device providing pressure-relieving protection shall be installed in each section of piping and hose in which liquid LP-Gas can be isolated between shutoff valves (NFPA 58: 6.13).

4. Hydrostatic relief valves designed to relieve the hydrostatic pressure that can develop in sections of liquid piping between closed shutoff valves shall have pressure settings not less than 400 psig or more than 500 psig, unless installed in systems designed to operate above 350 psig (NFPA 58: 5.13.1).

5. All materials used shall be resistant to the action of LP-Gas both as liquid and vapor under service conditions.

6. Hose shall be designed for a working pressure of at least 350 psig (2.4 MPag), with a safety factor of 5-to-1 and comply with ANSI/UL 569, Standard for Pigtails and Flexible Hose Connectors for LP-Gas, or with ANSI/UL 21, Standard for LP-Gas Hose (NFPA 58: 5.9.6).

7. Valves shall be recommended for LP-Gas service by the manufacturer and shall have a service pressure rating of 350 psig (NFPA 58: 5.12.2).

8. Pressure Containing Metal parts shall be fabricated of materials that is compatible with LP-Gas under service conditions and shall be in accordance with NFPA 58 Table 5.17.1.3.

9. The owner will need to install additional fire protection features that comply with the

high hazard occupancy criteria, as described by the IBC/IFC, in order to increase the quantity of LP Gas that is stored, used, dispensed or handled on the premises. The owner must also be granted a permit by the AHJ to increasing the LPG storage limit.

10. The means of egress components (i.e., exit doors and pathways) shall not be obstructed (i.e., must never be blocked or restricted) in accordance with IBC Chapter 10.

11. The NFPA 704 Hazard Rating diamond sign shall be posted on containers and at entrances to locations where hazardous materials are stored, dispensed, used or handled in accordance with IFC 2703.5:

12. Smoking shall be prohibited and "No Smoking" signs shall be posted at the locations where hazardous materials are stored, dispensed or used in accordance with IFC 2703.7.1. Additional signage may be required by the local code official.

13. Compressed gas containers, cylinders and tanks, whether full or partially full, shall not be exposed to artificially created high temperatures exceeding 125°F (52°C) or sub-ambient (low) temperatures unless designed for use under the exposed conditions in accordance with IFC 3003.7.4.

14. Qualified personnel using equipment and operating procedures in accordance with CGA P-1 in accordance with IFC 3005.7 shall perform transfer of gases between containers, cylinders and tanks.

15. The extraction solvent (e.g., n-butane, propane, etc.) shall be stored, used, and handled in accordance with the Material Safety Data Sheets (MSDS). All applicable MSDS are required to be posted in the control area in accordance with

16. Portable compressed gas containers shall be marked in accordance with CGA C-7 in accordance with IFC 3004.1, and shall be stored upright in accordance with IFC 3003.4.2.

17. Areas used for storage, use, and handling of compressed gas containers shall be secured against unauthorized access and physical damage in accordance with IFC 3003.5.

18. Compressed gas containers shall be separated from hazardous conditions including combustible materials, extreme temperatures, falling objects, and sources of ignition (e.g., open flames, hot plates, and electrical components) in accordance with IFC 3003.7.

19. The maximum allowable quantity of Flammable Liquid (e.g., ethanol, alcohol, etc.) stored or used within a single control area is limited to 30 gallons and shall be stored in flammable liquid cabinets in accordance with IFC Table "Maximum Allowable Quantity per Control Area of Hazardous Materials Posing a Physical Hazard"

20. The electrical components within the extraction room shall be installed and maintained in accordance with NFPA 70 per IFC 2703.9.4. The installation of Class I (explosion-proof) electrical equipment is not required with the approval of the building/fire code official in

accordance with the exemption described in NFPA 58 section 6.22.2.4.

21. LP Gas is classified as a Class I, Group D flammable gas by the NFPA 58. Furthermore, NFPA 58 classifies areas (i.e., Class I locations) where flammable mixtures can be present, and NFPA 70 establishes what equipment can be used in those areas. NFPA 58 section 6.22 covers electrical ignition source control and establishes Class I criteria for hazardous areas. However, NFPA 58 section 6.23.2.4 exempts residential and commercial occupancies from the electrical requirements applied to Class I locations. Therefore, Class I (explosion-proof) electrical components are not required with the approval of the authority having jurisdiction with an F-1 occupancy.

22. Electrical components (i.e., outlets, power strips, lights, etc.) would present an ignition source in the event of a gas leak. Potential electrical ignition sources must be separated from the flammable compressed gas use and storage area by a minimum of 10 feet or as much as possible due to the limited size of the room. As a further precaution, electrical components must be elevated 18 inches above the floor where possible since LPG is heavier than air.

23. A local hydrocarbon detector and alarm shall be in operation at all times during the storage, handling, or use of flammable gas within the extraction room meeting the intent of the IFC and NFPA 58. All extraction staff must be trained how to properly set and respond to the hydrocarbon detector/monitor.

24. It is highly recommended that the LP gas-monitoring device be located within 12 inches of the floor level and placed close to the extraction process. Furthermore, verify that the gas detection/monitoring system is capable of detecting (and initiating the emergency alarm) gas concentrations of at least 25% below their lower flammability limit (LFL). See gas MSDS sheets for exact LFL information. It is recommended that a wall mounted LP gas monitor be permanently installed.

25. Automatic Fire suppression (sprinklers) is not required as long as the quantity of flammable compressed gas used or stored in the extraction room is within the limits established by the IFC and with the approval of the authority having jurisdiction in accordance with IFC Chapter 27.

26. A hazardous exhaust system is required within the extraction room in accordance with IFC Section 2704.3. In addition, the system must continuously operate when Flammable Liquids and/or LP Gases are in the extraction room. The exhaust system shall be installed in accordance with the International Mechanical Code per IFC 2704.3.1.1.

27. The LP Gases Butane and Propane are heavier than air; therefore, the exhaust vent shall be located within 12 inches of the floor per IFC 2704.3.1.5. The location of the exhaust and inlet air openings shall be located to provide air movement across all portions of the room per IFC 2704.3.1.6 in accordance with IMC 502.8.

28. Exhaust air shall not be re-circulated to occupied areas (i.e., must vent directly

outdoors) per IFC 2704.3.1.7. Exhausted air shall be expelled at least 10 feet from operable exterior windows and doors. Fresh ventilation air shall be separated by at least 10 feet from outdoor gas storage areas in accordance with IMC 501.3.1.

29. Install an acceptable hazardous exhaust system capable of exhausting 1 cubic foot per minute per square foot within the extraction room in accordance with IMC 502.8 and IFC 2704.3.1.2.

30. The exhaust fan shall be listed for hazardous exhaust duty and must be of aluminum construction, spark resistant, and the motor shall not be located within the airstream in accordance with IMC Section 503.

31. Equipment with potential ignition sources (e.g., motors, switches, heaters, light bulbs, etc.) not rated for hazardous locations must be located above 18 inches from the floor and must not be located between LPG equipment and the exhaust.

Butane Equipment and Furniture

The following equipment must be inspected and in good working order prior to each use and be maintained according to manufacturer's specifications.

Garmat Extraction Booth

This state of the art enclosure houses the closed-loop butane extractor. The unique design features a vented floor over a containment pit, which removes all airborne solvents using a 750,000+ BTU air handler. The booth's ventilation system is interlocked with the power of the booth and meets all requirements set forth by the Occupational Safety and Health Administration for Class 1, Division 2 enclosures. A photo of the Garmat Extraction Booth is available in **Figure 1.**

Contact information for Garmat is below:

Johan Huwaert
General Manager
GARMAT U.S.A. LLC
1401 . Stanford Ave.
Englewood, CO 80110
Tel: +303 781 6802 ex.24
Fax: +303 531 0051
Cell: +303 319 2506
E-mail: johan@garmat.com
Website: www.garmat.com

Emotek Obe Dos Closed Loop Extractor System

The "Obe Dos" is a commercial extraction unit intended for wholesale product makers and has the

ability to hold up to 1000 grams per 6-inch column. The Obe Dos is made from Biotech stainless steel and can be used to extract plant oils within a complete extraction time of 45 minutes to an hour. The Obe Dos is ASME, ASNT, and NFPA Certified, and complies with the International Fire Code 2012, National Fire Protection Association (NFPA) 58, and Liquefied Petroleum Gas Code 2014. A photo of the Obe Dos is available in **Figure 2**.

Caresaver Refrigerant Recovery System

The Caresaver is used to evacuate butane in both vapor and liquid state from the extraction column and pump it into the recovery tank. A photo of the Caresaver Refrigerant Recovery System is available in **Figure 3**.

CascadeTEK TVO-2 Vacuum Oven

The vacuum oven is used to purge the remaining butane out of the BHO following the extraction process. The oven takes approximately 45 minutes to one hour to preheat. A photo of the CascadeTEK TVO-2 Vacuum Oven is available in **Figure 4**.

Edwards E2M30 Vacuum Pump

This pump attaches to the CascadeTEK Vacuum Oven. This pump evacuates the air from the oven's chamber during the purging process. An Edwards Oil Mist Filter is necessary for filtering exhaust from the vacuum pump. It is recommended that the oil in the Edwards e2m30 pump is changed every 30 days if operating daily. A photo of the Edwards E2M30 Vacuum Pump is available in **Figure 5**.

Intertek Electric Glycol Chiller (Chiller Tayfun H35G, 1/3rd horsepower, Totton)

This chiller is placed outside the Garmat Extraction Booth with a line running to a copper coil wrapped around the delivery vessel of the extraction machine. This unit keeps the delivery vessel chilled with glycol circulating at 20 degrees Fahrenheit. It is recommended to turn the chillers off 1 night per week to allow the lines to thaw. When the machine is off, dust will be wiped off of all vents as well as the top of the machine. A photo of the Intertek Electric Glycol Chiller is available in **Figure 6**.

NTEP Certified Scale (0.01g precision)

Scale must be certified and calibrated regularly in accordance with state and local regulations.

Lockable Exterior Storage Cage for Butane Tanks

All butane tanks must be kept in a locked exterior cage when not in use. A photo of a lockable exterior storage cage for butane tanks is available in **Figure 7**.

Lockable Interior Storage Cabinet for Cleaning Solvents

All flammable-cleaning materials must be kept inside a lockable, fireproof storage cabinet when not in use.

Fire Retardant Cabinet in Lab For Isopropyl Alcohol

When not in use, all isopropyl alcohol must be kept inside a fire retardant cabinet inside the lab. A photo of a fire retardant cabinet is available in **Figure 8**.

Apeks 1500-5L Oil Extraction System

The Apeks 1500-5L Fluid Extraction System is a commercial extraction unit intended for wholesale product makers and has the ability to hold up to 3 pounds of dry, ground material. The Apeks is made from 304 stainless steel and can be used to extract plant oils. The Apeks is ASME Certified, and is designed to be environmentally friendly. The Apeks is designed to be easy to use and safe, with non-isolable pressure gauges on each pressure containing vessel for visual verification of depressurization prior to opening the unit. A photo of the Apeks is available in **Figure 9**.

Describe the processes to be used to create marijuana concentrates:

Pursuant to 3 AAC 306.555, GOOD LLC will utilize all marijuana plant material of acceptable quality in the production of their products. Marijuana oil will be available to customers in a pre-dosed, ready-to-use form and in further processed forms, or products contained herein.

Ice water extraction is by far the safest method for separating trichomes, which contain therapeutic cannabinoids and terpenes, from cannabis plant material in order to obtain only the resin. As resin glands are more dense than water and trichomes become brittle at low temperatures, ice water and agitation are all that is needed to separate the desired resinous material from the plant material.

In this process, cannabis plant material is placed in a mesh bag which is agitated in ice water, which separates trichomes from the plant material. Due to the density and size of the trichomes, they will pass through the holes in the mesh and sink to the bottom of the container. After passing the material through a series of mesh bags, filtering the solid content from the water used throughout the process, and pressing the resulting product to remove excess moisture, the result is pure, solvent-free cannabis resin, or hashish.

Production and Process Control

GOOD LLC has developed and will continue to improve production and process control procedures, which are built in to the production procedures for each product and will be incorporated into mandatory production records.

The production and process control procedures included with this application have been developed based on knowledge of and experience with effective measures for controlling variation in the production process, as described above. Production processes and the effectiveness of the built-in production and process controls will be validated through analysis of data collected at key points in the process prior to distribution of any product.

After a process has been validated and the product is approved for distribution, GOOD LLC will continue to require manufacturing agents to record and enter data at key points in the production process and carry out pre-procedure, in-process, and post-procedure inspections and quality checks of random product samples for every lot. These continual control and data collection measures will be approved by the Quality Control Unit and built into GOOD LLC's standard operating procedures.

Process and controls will vary depending on the product produced, but may include:

1. Pre-process inspection (and sometimes analysis) of constituents;
2. Pre-procedure documentation;
3. In-process inspection at the commencement or closing of key phases of the production process;
4. Monitoring and recording of process parameters, including:
    a. Time;
    b. Temperature;

    c. Pressure; and
    d. Speed;

5. Required random sampling, analysis, and recording of certain objective characteristics of in-process and finished products to assess conformity to specifications and consistency of the lot;
6. Calculating difference between actual and theoretical yield at key phases of the production process and for the finished product to assess whether deviation from the theoretical yield is within an acceptable range;
7. Comprehensive recording of production environment, supplies, equipment, personnel, and procedural adherence in production logs;
8. Recording of all deviations from the standard operating procedure; and
9. Post-procedure documentation.

Policies and Procedures

Important Points:

1. Manufacturing agents will consult with the Manufacturing Manager about new developments in processes or procedures and will be instructed not to hesitate to ask questions when they come up;
2. All manufacturing agents will review quality control, safety and emergency procedures prior to beginning any work at the manufacturing facility;
3. Proper environmental control and monitoring is will always be maintained in the manufacturing facility;
4. The manufacturing facility will be completely cleaned and sanitized at all times;
5. Protocol will dictate that only one batch at a time will be processed and batches will never be mixed; and
6. All products will be properly labeled at all times.

Sanitation and facility requirements (ServSafe):

1. All shelving must be at least 6 inches from the floor;
2. All Stainless Steel tables must have a raised bottom shelf;
3. All manufacturing facility agents should complete the ServSafe class;
4. Manufacturing facility spaces must have a closed-loop air handling systems. If outside air must be pulled into the facility, a HEPA filter must be installed and maintained;
5. Use Germicidal Ultraviolet-C Air Purification System to combat possible airborne pathogens. This Ultraviolet Air Sanitizer uses ultraviolet light to neutralize airborne bacteria, molds, and dust mites. It should be installed in the main air supply or return duct of a forced air heating/AC system;

6. All employees must wash hands before and after each process/task that involves work surfaces or handling product, tools, or equipment;
7. Wash hands/arms with as hot of water as you can stand (at least 100 degrees Fahrenheit), apply soap and scrub for at least 20 seconds. Make sure to get in between fingers, under nails, and up to elbow if wearing a t-shirt. Thoroughly rinse with warm water, then dry with new paper towel and use this towel to turn off the water;
8. Always wear gloves, hair net, and facial hairnet if facial hair is longer than 1 inch;
9. Never eat or drink in production areas;
10. Clean all surfaces and utensils using Food Service's Quat Sanitizer;
11. Clean by wiping with Quat Sanitizer and a clean towel. Quat must remain on the surface for a minimum of 30 seconds to achieve sanitization;
12. All surfaces and utensils must be clean and sanitized at opening;
13. All surfaces and utensils must be cleaned and sanitized at closing;
14. Work area surfaces and utensils must be cleaned and sanitized between procedures;
15. Spray the entire work surface with Quat Sanitizer and allow it to air dry completely. Do not wipe;
16. All work surfaces and Utensils must be cleaned and sanitized before and after every use;
17. Only store products in their approved containers;
18. Keep products at least 6 inches off the floor and away from all walls;
19. Unless you're wearing gloves, do not touch utensils that come into contact with any product; and
20. Use separate utensils for each task.

Storage of Products:

1. All products must have labels with the creation date, expiration date, product description, and initials of the employee who is responsible for creating the product;
2. All infused oils must be stored below 41 degrees Fahrenheit;
3. To properly cool infused oils, place container in an ice bath to cool below 70 degrees Fahrenheit. Once below 70 degrees Fahrenheit, it is okay to move the infused oil to 41 degrees Fahrenheit for storage; and
4. All Thermometers must be calibrated daily to 32 degrees Fahrenheit:
    a. To calibrate fill large container with crushed ice. Add tap water until container is full;
    b. Put thermometer stem/probe into the ice water. Wait 30 seconds or until indicator stops moving; and
    c. Adjust thermometer so it reads 32 degrees Fahrenheit. Only allow a 2-degree variation.

Dry Product Visual Inspection

The extraction agent must inspect all tested and approved marijuana product materials transferred from the cultivation facility for quality and presence of contaminants according to the following policy and procedure and prior to the acceptance of incoming deliveries.

Policy and Procedure:

1. Put on all required personal protective equipment (PPE);
2. Wash hands by following the procedure for “Washing Hands”;
3. Place a sample of the delivered product on the stainless steel table in the inspection area;
4. Turn off all fans before beginning inspection process;
5. Close all doors before beginning inspection process;
6. Inspect the general appearance of the product, as well as a microscopic and odor examination for the presence of mold and other contaminants;
7. Use a black light to check for presence of mold. In the presence of mold, it will emit a fluorescent green color:
    a. If mold is discovered, the entire package must be rejected and moved to quarantine immediately.
8. If the product is acceptable, fill out the Pre-Procedure Documentation Log and label product with the batch number, date received, license number of providing entity, what the product is, and what process the product will go through;
9. If processing immediately, the product being processed shall be weighed and separated, with any remaining product placed into the product storage room; and
10. Label all products with name, exact weight and batch number.

Fresh Frozen Visual Inspection

The extraction agent must prepare a tested and approved marijuana sample and inspect all fresh frozen product materials for quality and presence of contaminants according to the following procedure. If marijuana flower product is accepted from an outside licensee, the extraction agent is also responsible for notifying the client delivery agent of the inspection schedule prior to accepting incoming deliveries.

Policy and Procedure:

1. Put on all required personal protective equipment (PPE);
2. Wash hands by following the procedure for “Washing Hands”;
3. Remove a 1-gram sample from the package;
4. Place sample into the quarantine refrigerator to thaw for 24 hours;
5. Place the remainder of the product into the quarantine freezer;
6. After sample has thawed, visually inspect using a black light and microscope:

   a. If mold is discovered in sample (indicated by fluorescent green color when viewed under a black light), place it in the quarantine freezer with the remainder of the product in the package and immediately manifest back to client; and
   b. If product is approved on inspection and not being processed immediately, the agent may continue the intake process.
7. Fill out the Pre-Procedure Documentation Log and label product with the batch number, date received, license number of providing entity, what the product is, and what process the product will go through;
8. If processing immediately, the product being processed must be weighed and separated, with any remaining product placed back into freezer immediately; and
9. Label all products with name, exact weight and batch number prior to storing.

Policy and Procedure

Prior to the extraction procedure, the extraction agent shall document the following within the Pre-Procedure Documentation Log:

1. Date and time of extraction;
2. Client name;
3. Strain(s);
4. Batch number of product;
5. Weight of product;
6. Fresh frozen weight;
7. The type of product being processed (dense bud, loose bud, trim);
8. Aesthetic qualities of the product;
9. Duration of drying;
10. Duration of curing;
11. Whether product was trimmed by hand or machine; and
12. Receiving agent initials.

Section 4: Proposed Marijuana Concentrates and Marijuana Products

Product Name: N-Butane Concentrate

Type: Concentrate

Product Description: A thick, viscous liquid that is typically golden or light amber color. The liquid is allowed to harden, which creates a smooth, glass-like substance. This substance is either processed additionally into a "wax" or measured out in its current state as "shatter" and broken into smaller, half gram or gram containers.

Standard Production Procedure and Detailed Manufacturing Process

N-Butane Extraction

Before each solvent fill or extraction, make sure to carefully inspect the collection chamber and column gaskets. If the gaskets are cracked or warped, they must be replaced. Column gaskets will generally warp over time from one side being tightened more than the other. If the extraction machine is operating daily, it is highly recommended that the gaskets be replaced every 30 days.

Butane Machine Inspection

Prior to the commencement of any procedure within, the extraction agent must ensure that all identified parts are in good-working order. All work areas, contact surfaces, utensils and tools must be cleaned and sanitized prior to use.

Butane Extraction Machine Assembly

The following procedure must be reviewed when assembling the extraction machine. This procedure is a general guide to the assembly process but may need to be revised to include specifications to meet new or updated local or state requirements. All work areas, contact surfaces, utensils and tools must be cleaned and sanitized prior to use:

1. Put on all required personal protective equipment (PPE);
2. Wash and sanitize hands;
3. Place large gasket into grooves of the collection chamber;
4. Place lid onto the collection chamber, ensuring it properly fits with the large gasket;
5. Insert two long 3/8" heavy-duty bolts into the brackets of the collection chamber lid;
6. Tighten nuts onto the bolts by turning a socket wrench 5 times on both sides. (This avoids warps on the gasket from one side being tightened too much);
7. Attach filter gasket to the lid of the collection chamber;
8. Connect inline valve B with heavy-duty clamp D;
9. Place the finest remaining filter on top of the inline valve B;
10. Connect the emergency discharge valve with the heavy-duty clamp C;

11. Place the filter on top of the emergency discharge valve;
12. Connect the inline valve A with the heavy-duty clamp B;
13. Place the finest remaining filter on top of the inline valve A;
14. Insert two long 3/8” heavy-duty bolts into the brackets of the extraction column lid;
15. Tighten nuts onto the bolts by turning a socket wrench 5 times on both sides;
16. Connect the extraction column with the heavy-duty clamp A on top of the inline valve A with the filter already in place;
17. Secure the extraction column to the mount with the provided black Velcro strap; and
18. Complete all cleaning and sanitation procedures.

N-Butane Fill

TANKS (CYLINDERS) OF ANY SIZE MUST ALWAYS BE HANDLED AND STORED UP-RIGHT.

Once the product has been properly documented, the extraction agent shall complete the following steps to prepare the extraction machine for operation. Extraction agents performing this procedure must be certified according to the local jurisdiction’s requirements for LP Gas transfilling. The time required to complete this phase of the process is dependent on the volume of the butane tank and the desired fill-level of the butane vessel. All work areas, contact surfaces, utensils and tools must be cleaned and sanitized prior to use:

1. Put on all required personal protective equipment (PPE);
2. Wash and sanitize hands;
3. Inspect all connections, hoses, and fittings of the extraction machine;
4. Remove the solvent chamber and carry to outside of the building to the solvent cage containing the larger tank (120 lb. tank);
5. Attach the black fill hose from the butane tank to the left-side valve on the lid of the burp line of the delivery vessel of the extraction machine;
6. Fill delivery vessel to desired level;
7. Remove the black fill hose from the delivery vessel;
8. Lock the solvent cage;
9. Take the solvent chamber back into the building and into the extraction booth; and
10. Complete all cleaning and sanitation procedures.”

Distillation

TANKS (CYLINDERS) OF ANY SIZE MUST ALWAYS BE HANDLED AND STORED UP-RIGHT

Once the product has been properly documented, the extraction agent shall complete the following steps to prepare the extraction machine for extraction. Extraction agents performing this procedure must be certified according to the local jurisdiction's requirements for LP Gas transfilling. The time required to complete this phase of the process is dependent on the volume of the butane tank and the desired fill-level of the butane vessel. All work areas, contact surfaces, utensils and tools must be cleaned and sanitized prior to use.

1. Put on all required personal protective equipment (PPE);
2. Wash hands by following the procedure for "Washing Hands";
3. Ensure that 5-6 gallons of water is warmed throughout the Extraction Process. (Keep water temperature under 125°F.);
4. Inspect all connections, hoses, and fittings of the extraction machine;
5. Begin assembling the extraction column of the extraction machine;
6. Wrap the provided stainless steel filter with Whatman #1 lab filter papers, and place into the grove on the bottom of the extraction column;
7. Assemble the extraction machine per manufacturer's specifications;
8. Attach the Caresaver Refrigerant Recovery System to the vapor return valve A on the lid of the collection chamber the extraction machine;
9. Make sure inline valve A and inline valve B are OPEN;
10. Make sure all of the valves on the column lid are CLOSED;
11. Turn on the Caresaver Refrigerant Recovery System and pull the collection chamber to a vacuum state;
12. Once the pressure gauge on the collection chamber has stabilized at full vacuum for 15 seconds, close the vapor return valve A on the collection chamber and turn off the Caresaver Refrigerant Recovery System;
13. Open the small valve on the right side of the collection chamber of the extraction machine;
14. Connect butane line; ensuring it is tight and secure;
15. Open valves of the of the extraction machine in the following succession:
    a. Liquid input line A;
    b. Burp line A;

c. Vapor return line B;

d. Liquid input line B; and

e. Turn on the Caresaver Refrigerant Recovery System (the Caresaver Refrigerant Recovery System may be programmed to automatically turn on).

16. 3-10 seconds after butane drip becomes visible, shut the liquid input line of the extraction machine (time determined by weight in column);

17. Wait until pressure gauge on top of column of the extraction machine reads between 0 and 5 PSI, and there is no more drip visible in the sight glass, then do the following:

    a. Close liquid input line A;

    b. Close inline valve A;

    c. Open burp valve; and

    d. Close inline valve B.

18. Remove column from the extraction machine;

19. Remove screen from column attachment;

20. Remove heavy-duty clamp B, inline valve A, and the associated filters;

21. Add warm water to the reservoir below the collection chamber of the extraction machine;

22. Monitor pressure gauge on top of collection chamber. Begin draining water when pressure gauge reaches 15 PSI;

23. Monitor butane level by shining a flashlight into the site glass as the butane moves from the collection chamber to the delivery vessel;

24. When pressure gauge on collection chamber approaches 0 PSI, prepare to remove collection chamber lid by quickly completing the following steps:

25. Close burp line A;

26. Turn off the recovery pump;

27. Close vapor return line B;

28. Release remaining pressure in collection chamber using inline valve B.

29. Remove the collection chamber lid; and

30. Complete all cleaning and sanitation procedures.”

Butane Extraction Process

Once the system has been properly filled with butane, the extraction agent shall complete the following steps to complete the extraction process. Depending on the amount of butane used and material in the extraction column, this phase of the process takes approximately 45 minutes to an hour to complete. All work areas, contact surfaces, utensils and tools must be cleaned and sanitized prior to use.

1. Put on all required personal protective equipment (PPE);
2. Wash and sanitize hands;
3. Ensure that 5-6 gallons of water is warmed throughout the Extraction Process. (Keep water temperature under 125°F);
4. Inspect all connections, hoses, and fittings of the extraction machine;
5. Ensure the butane has been distilled and is inside the delivery vessel;
6. Begin assembling the extraction column of the extraction machine;
7. Wrap the provided stainless steel filter with Whatman #1 lab filter papers, and place into the grove on the bottom of the extraction column;
8. Gently break up the marijuana product by hand;
9. Place the marijuana product in the extraction column of the extraction machine, making sure to stop every couple inches to compress product;
10. Finish assembling the extraction machine;
11. Attach the Caresaver Refrigerant Recovery System to the vapor return valve A on the lid of the collection chamber the extraction machine;
12. Make sure inline valve A and inline valve B are OPEN;
13. Make sure all of the valves on the column lid are CLOSED;
14. Turn on the Caresaver Refrigerant Recovery System and pull the collection chamber to a vacuum state;
15. Once the pressure gauge on the collection chamber has stabilized at full vacuum for 15 seconds, close the vapor return valve A on the collection chamber and turn off the Caresaver Refrigerant Recovery System;
16. Open the small valve on the right side of the collection chamber of the extraction machine.
17. Connect butane line; ensuring it is tight and secure;
18. Open valves of the of the extraction machine in the following succession:
    a. Liquid input line A;
    b. Burp line A;

c. Vapor return line B;

d. Liquid input line B; and

e. Turn on the Caresaver Refrigerant Recovery System (the Caresaver Refrigerant Recovery System may be programmed to automatically turn on).

19. 3-10 seconds after butane drip becomes visible, shut the liquid input line of the extraction machine (time determined by weight in column);

20. Wait until pressure gauge on top of column of the extraction machine reads between 0 and 5 PSI, and there is no more drip visible in the sight glass, then do the following:

    a. Close liquid input line A;

    b. Close inline valve A;

    c. Open burp valve; and

    d. Close inline valve B.

21. Remove column from the extraction machine;

22. Remove screen from column attachment;

23. Remove heavy-duty clamp B, inline valve A, and the associated filters;

24. Add hot water to the reservoir below the collection chamber of the extraction machine;

25. Prepare a baking sheet lined with parchment paper;

26. Monitor pressure gauge on top of collection chamber. Begin draining water when pressure gauge reaches 15 PSI;

27. Monitor texture of extract through the sight glass by shining a flashlight in the other sight glass;

28. When pressure gauge on collection chamber approaches 0 PSI, prepare to remove collection chamber lid by quickly completing the following steps:

    a. Close burp line A;

    b. Turn off the recovery pump;

    c. Close vapor return line B; and

    d. Release remaining pressure in collection chamber using inline valve B.

29. Remove the collection chamber lid;

30. Remove extracted resin from the collection chamber of the extraction machine by scraping extract onto parchment baking sheet using solvent-proof scraping tools;

31. Place baking sheet and extract in the CascadeTEK TVO-2 Vacuum Oven;

32. After extraction, the raw plant material will remain saturated with flammable solvent;

33. These materials must be stored in a safe manner (vented enclosure) prior to being discarded in accordance with rules and regulations;

34. Complete the appropriate inventory control procedure in the Automated Data Processing System (ADPS); and

35. Complete all cleaning and sanitation procedures."

Vacuum Purge

Begin preheating vacuum purge oven at least 30-minutes. All work areas, contact surfaces, utensils and tools must be cleaned and sanitized prior to use:

1. Put on all required personal protective equipment (PPE);

2. Wash and sanitize hands;

3. Set the CascadeTEK TVO-2 Vacuum Oven to 125°F;

4. Open the collection chamber of the extraction machine;

5. Place a piece of parchment paper on a baking sheet. Very gently, scrape the extract onto the parchment paper with the solvent-proof scraping tool. Use extra caution to avoid scraping or agitating the extract. Agitating the extraction before vacuum purging will result in a "buddery" end product and can degrade terpene presence. Place the baking sheet on an oven rack;

6. Allow the extract to sit in the oven for at least 40 minutes in order to acclimate to the temperature;

7. After acclimation, start the Edwards E2M30 Vacuum Pump using a slow draw;

8. Allow the product to slowly expand as large as possible before it makes contact with the side of the sheet pan;

9. Partially relieve the vacuum pressure to prevent the product from touching the sides of the oven;

10. Slowly release the vacuum in little bursts;

11. Allow the Edwards E2M30 Vacuum Pump to reach a full vacuum state;

12. Every 2 hours open the air-valve on the CascadeTEK TVO-2 Vacuum Oven and then turn the Edwards E2M30 Vacuum Pump off;

13. Flip the product ("slab") over and onto another sheet of parchment paper and place back into the oven;

14. Repeat steps 6-13 until desired level of residual solvents is reached. This process needs to be done a minimum of three times;
15. When bubbling has ceased, open the air-valve on the CascadeTEK TVO-2 Vacuum Oven, and then turn the Edwards E2M30 Vacuum Pump off;
16. Let extract sit in the CascadeTEK TVO-2 Vacuum Oven for 60 seconds;
17. Remove the baking sheet from the CascadeTEK TVO-2 Vacuum Oven, and remove the parchment paper from the baking sheet;
18. Place another piece of parchment paper on top of the extract, which is now considered "Shatter";
19. Place the shatter on stainless steel racks with batch tag for packaging preparation;
20. Label all products with product name, date, exact weight and batch number prior to storing;
21. Complete the appropriate inventory control procedure in the ADP/POS system; and
22. Complete all cleaning and sanitation procedures."

Optional Winterization and Ethanol Purging

Winterization is an optional purification process in which the BHO is dissolved in pure ethanol and funneled through a strainer to remove remaining waxes and fats (lipids). This process is not recommended for smoking-grade extract, as it will also strip many terpenes from the extract. After winterization, a substance known as an Absolute is left behind. This phase takes approximately two days. All work areas, contact surfaces, utensils and tools must be cleaned and sanitized prior to use according to the requirements listed in the procedure for "Cleaning, Sanitation and Hygiene":

1. Put on all required personal protective equipment (PPE);
2. Wash and sanitize hands;
3. Inside a glass jar, dissolve the BHO in ethanol (200 proof); place it in a deep freeze using dry ice.
4. Wait for 48 hours for plant waxes and fats to precipitate out;
5. Use a funnel to pour the solution through the lab filter into a Pyrex dish. The precipitated plant fats and waxes will remain in the filter as solids;
6. Cold boil away the ethanol under vacuum at room temperature using both a Rotovape and the CascadeTEK Oven. Ethanol boils at 88.3°C/173°F at sea level. The vacuum will reduce the boiling point of ethanol as the atmospheric pressure is removed;
7. Cold boil at 115°F and a -29.5" Hg vacuum;

8. Place the shatter on stainless steel racks with batch tag for packaging preparation;
9. Label all products with product name, date, exact weight and batch number prior to storing according the requirements listed in the procedure for “Product Packaging and Labeling: Extraction”;
10. Complete the appropriate inventory control procedure in the ADPS; and
11. Complete all cleaning and sanitation procedures.”

Optional Conversion from Shatter to Wax

After removing extract from first purge process as shatter, break up slab into small pieces and put them in a pile on the middle of the parchment paper. The timeline associated with this phase depends on the consistency and texture of the shatter, and the desired consistency and texture of the wax. This secondary manufacturing ensures the removal of virtually all-remaining solvents from the shatter. All work areas, contact surfaces, utensils, and tools must be cleaned and sanitized prior to use:

1. Put on all required personal protective equipment (PPE);
2. Wash and sanitize hands;
3. Place parchment into the Cascade oven (preheated to 135°F);
4. Place in oven for 30 minutes;
5. Remove extract from oven;
6. Lightly go over top of the extract with solvent-proof scraping tool in a smearing motion;
7. When extract begins to harden, continuously stretch and aerate the extract until it becomes homogenous. This step may have to be repeated depending on the starting texture and desired consistency;
8. Let the extract stand in the oven that has been preheated to 135°F, until desired consistency is reached;
9. Remove parchment from oven;
10. Place parchment cover on extract;
11. Place parchment on stainless steel racks with batch tag on top for packaging preparation;
12. Label all products with product name, date, exact weight and batch number prior to storing according the requirements listed in the procedure for “Product Packaging and Labeling: Extraction”;
13. Complete the appropriate inventory control procedure in the ADPS; and

14. Complete all cleaning and sanitation procedures.

Depiction:

Product Name: Ice Water Concentrate

Type: Concentrate

Product Description: This is a solventless concentrate, typically golden or light brown in color. The consistency is similar to sand, as it appears to be grainy when finished. This substance is measured out and divided into smaller, half gram or gram containers. This is also known as "Ice Water Hash, "Bubble Hash" or "Solventless Hash," as only water or ice is used in this process.

Standard Production Procedure and Detailed Manufacturing Process

Equipment:

1. Food grade agitator;

Supplies:

1. 40 lbs. of ice, 20 lbs. of block ice and 15 lbs. of dry ice for every run processed. When using dry ice, make sure it's used the same day it was prepared for use because it will depreciate at a rate of 8-12 lbs. every 24 hrs.;
2. Screened flower material zipped bag (20 gallon, 1 bag per run);
3. Micron Sifter Screen Set (place in order of lowest to highest micron):25µ, 38µ, 70µ, 120µ, 160µ and 220µ.
4. Filtered cold water (25-30 gallons at approximately 31-32 degrees);
5. 20 gallon food grade bucket;
6. Water pump/hose;
7. 2 gallon pump sprayer;
8. Spatula; and
9. Stainless steel measuring spoon.

Drying Supplies:

1. Clean and sanitary hand towels for placement below drying pressing screen;
2. Pressing screens for each bag used;
3. Unbleached parchment paper for final drying process;
4. Scraper/Chopper;
5. Stainless steel strainer; and
6. Moisture content meter.

Packaging and Labeling Supplies:

1. Scale 1000g to the 0.01g;
2. Unbleached parchment paper;
3. Stainless steel tools for cutting and scooping;
4. Final product jars (black child-resistant);
5. Tamper evident heat seal shrink-wrap;
6. Final packaging and required labeling; and
7. Heat conveyer belt for shrink-wrap.

Water Extraction Process:

1. Manufacturing agents must have all required personal protective clothing while working in the manufacturing facility: hair and facial hair net, scrubs, shoes, protective eyewear, and gloves;
2. Inspect equipment to make sure there is no damage that could hinder the processes;
3. Weigh and separate raw products. If using multiple strains they should add up to 750 grams for dry product and 2500 grams for fresh frozen product. All beginning weights using the product archive form shall be documented in the automated data processing system;
4. Fill out a product form for all materials used during the process, containing the following information: product name, date, weight and batch number;
5. Fill the large 20-gallon bucket with 15 lbs. of dry ice and a 10 lb. ice block. Add 15 gallons of water to start chilling contents at 31 degrees;
6. Add 20lbs of ice to food-grade agitator;
7. Fill (1) 20 gallon screen bag with 750 grams of product with dry material or 2500 grams of fresh frozen material;
8. Add material to screen bag and make sure the screen bag is closed entirely, secured tightly, and does not have any holes. Place screen bag into the food-grade agitator and add another 20 lbs. of ice around the screen bag until it's completely covered. The ice level should be at least 6 inches from the top. Allow screen bag to sit in food-grade agitator for 15 minutes to chill material;
9. Fill the food-grade agitator with cold water until it's barely visible below the ice line. Water and ice must stay between 31-32 degrees. Never fill the food-grade agitator fully;
10. Allow fresh frozen product to soak for 5 minutes. Allow dry product to soak for 15 minutes;

11. Turn on food-grade agitator machine to low agitation setting and set for 15 minutes for the first run. The ideal watercolor at the end of a cycle is a golden hue with froth on top;

12. While the Food-grade agitator is running, place micron sifter screens in order from lowest to highest micron level inside the food grade bucket (5 or 20 gallons), depending on screen size;

13. When the food-grade agitator has stopped, pump the water into the large food grade bucket that is lined with micron sifter screens;

14. Refill food-grade agitator with water at 31-32 degrees until the water is just barely visible below the ice line. Keep food-grade agitator machine on the low agitation setting and run it for an additional 9 minutes. Empty the water into the large food grade bucket lined with sifter screens. If using fresh frozen product, repeat this step one more time for a total of three runs. If using dry material, repeat this step two more times for a total of four runs;

15. Once all runs are complete, use water at 31-32 degrees to rinse ice and sifter screens. Drain the final rinse-water through micron sifter screens;

16. Let the product settle in the large food grade bucket giving minimal agitation until the water drains through the bags completely;

17. Starting with the highest-micron micron sifter screen, slowly pull the screen down the outer sides of the food grade bucket to bring screen to the top. When the screen is almost completely to the top, use pump sprayer filled with filtered water to wash trichromes into the center of the screen;

18. If the concentrate looks too green, swirl the sifter screen around and wash with pump sprayer until chlorophyll is washed through the screen;

19. Remove concentrate with a spatula from each screen and place the concentrate on a pressing screen, which is placed over clean hand towels; press between the screen and hand towels and set it aside, making sure to label each micron;

20. Rinse each micron screen after the concentrate has been removed into the next screen inside the bucket. This will collect any residual trichromes from the last bag into the next screen;

21. Clean each bag with filtered cold water as soon as the concentrate has been removed and residual trichromes have been sprayed into the next screen. This is critical for keeping the micron screens in good condition;

22. Spray the inside and outside of all screens with filtered water until there is no visible residue, then hang it to air dry;

23. Clean food-grade agitator by rinsing with warm water and h2o2. Run the machine for a cycle and drain, repeat with just warm water two times until machine is clean. Sanitize. Leave the top open to allow the machine to fully dry;

24. Wash buckets with hot water and antibacterial soap. Sanitize;

25. Sanitize all stainless steel products with alcohol and rinse them with hot water and antibacterial soap. Sanitize;

26. Wipe down all surfaces with alcohol to remove residue and wipe down thoroughly with a surface cleaner;

27. Sweep floors and mop all work areas; and

28. Place all equipment and supplies back in designated area.

Drying Process:

1. Lay pieces of unbleached parchment out. Take each micron patty and grate it over the unbleached parchment with a stainless steel strainer;

2. The concentrate must be moved around to help pull moisture out as gently as possible without pressing or crushing the product;

3. Place concentrate on a new sheet of unbleached parchment and set it on a drying sheet;

4. Store the concentrate on a drying rack in a cool area for 24 to 48hrs. This drying area must be maintained at 68 degrees and 40% humidity;

5. As product dries, continue to move it around and fluff it to allow it to dry from all sides;

6. Monitor drying product to ensure it's drying evenly (no pockets or signs of mold); and

7. Once the product is completely dry and the concentrate is waxy to the touch, place it into jars for curing. Open jars to allow product to breathe for 1 hour a day.

Depiction

Product Name: Vape Pen with Oil

Type: Concentrate: Butane Extract

Product Description: This product is meant to be vaporized in individual cartridge, where the battery is attached and a heating element within the cartridge creates a vaporized product. The oil is typically light to dark brown, depending on the marijuana flower product used to create it.

Standard Production Procedure and Detailed Manufacturing Process

Personal Protective Equipment (PPE)

In addition to your required company laboratory uniform, the following shall be clean or new prior to each use:

1. Nitrile gloves (required);
2. Lab coats (required);
3. Hair nets or beard nets (required);
4. Safety glasses (if necessary or desired); and
5. Disposable respirator (if necessary or desired).

Manual Equipment and Supplies

1. HandyStep S Repeating Pipette; and
2. Pen oil cylinder/container holding tray/rack.

Automated Equipment and Supplies

1. Liquid filler robot; and
2. Customized liquid filler robot holding tray.

Materials

1. N-Butane extracted concentrate;
2. Organic terpenes;
3. Pen oil cylinders/containers for attachment to battery;
4. Pen oil cylinder/container holding tray/rack; and
5. Labels.

Procedures

Important Reminders:

- Consult with the Product Manufacturing Manager about new developments in processes or procedures and don't hesitate to ask questions when they come up;
- Review quality control, safety and emergency procedures prior to beginning any work at the manufacturing facility;
- Proper environmental control and monitoring is critical in the manufacturing facility;
- The manufacturing facility must be completely cleaned and sanitized at all times;
- Work with one batch at a time and never mix batches; and
- Ensure all products are properly labeled at all times.

Manual processing

1. Verify the concentrate product has been tested and the cannabinoid levels are documented. The concentrate must be decarboxylated prior to use.
2. Start by putting on all safety equipment. (Gloves, hairnet, beard net)
3. Inspect, clean and prepare any equipment as necessary.
4. Determine the dosage of the oil to be added to each vape pen (generally it is 3 parts oil to 1 part polyethylene glycol 400, but you may adjust according to the dosage level that you want).
5. Homogenize the mixture using a CAT X120 or other appropriate device.
6. Add the mixture to the cartridges (containers that attach to the battery) using the HandyStep Pipette S.
7. Place the filled cartridges in the holding tray and place it in the designated storage area.
8. Measure the amount of doses and enter all numbers in the ADP/POS or other inventory tracking software.
9. Wash and clean all the equipment that was used.
10. Wipe down the workstation and finish any cleaning or sanitary requirements.

Depiction

Describe the marijuana product manufacturing facility's plan for disposal of any expired or outdated marijuana or marijuana product that is not sold or transferred to another licensed marijuana establishment:

Pursuant to 3 AAC 306.520, GOOD LLC has developed written standard operating procedures ("SOPs"), incorporating Good Manufacturing and Handling Practices, which require the disposal and segregated storage of any marijuana that is expired, outdated, damaged, deteriorated, misbranded, or adulterated ("affected"). The manufacturing facility Product Manufacturing Manager, in coordination with the Compliance Committee and Inventory Manager will be responsible for quarantining, arranging inspections with the Quality Control Team ("QCT"), adjusting inventory within the Automated Data Processing System ("ADPS") and authorizing destruction and disposal of any affected marijuana. The QCT is responsible for inspecting all affected marijuana that is quarantined and will document why and when the marijuana was quarantined and placed in segregated storage and how it failed to meet specifications. The Inventory Manager alone may release these materials from quarantine for destruction, disposal and pick-up by the waste disposal vendor.

The Product Manufacturing Manager, Inventory Manager and Compliance Committee are assigned responsibility for enforcing the policies and procedures set forth herein. The Inventory Manager will be responsible for delegating waste disposal tasks to Manufacturing Agents ("Agents") and for ensuring all Agents are appropriately trained to execute waste disposal tasks in compliance with GOOD LLC policies and procedures as well as all applicable laws and regulations. The Inventory Manager will be responsible for documentation and oversight of waste disposal.

For present purposes, "marijuana waste" means any part of the marijuana plant that is not usable or cannot be processed (e.g., stems, moldy plant material, marijuana that does not meet the definition of marijuana), solid plant material that remains after extraction is complete, expired or contaminated derivative products or source plant material, and finished derivative products that do not meet testing standards (e.g., contaminants detected, inadequate specifications). Hazardous waste and universal waste are defined in this response. Additional waste disposal provisions include compliance with waste disposal guidelines from the Environmental Protection Agency (EPA) and the separate storage and disposal of expired, contaminated, or otherwise unusable marijuana and derivative products. All waste types, including marijuana waste, will be securely stored, handled, recorded, transported, and disposed of in accordance with all applicable local, state, and federal laws and regulations.

All marijuana waste disposal will be recorded in the Waste Disposal Log with details pertaining to the date and time of disposal, the agent or manager responsible, the reason for disposal (i.e., the type of waste), the lot or batch identifier (if applicable), the manner of disposal, and the quantity of waste.

This response demonstrates that GOOD LLC has developed waste disposal processes and procedures that will ensure compliance with waste disposal requirements for all waste types, prevent waste from becoming a hazard to the facility, products, or environment, and thwart attempts to divert or steal marijuana plant waste.

All marijuana waste generated from normal processing activities, excess production, contamination, adulteration, product expiration, or lack of suitability for human consumption will be securely stored, rendered unusable, and disposed of in a manner that ensures that marijuana waste will only be accessible to authorized persons and will not present a threat to the environment. GOOD LLC will implement best practices to streamline effective and responsible waste disposal procedures in an effort to prevent unauthorized diversion, misuse, product loss, or environmental contamination. GOOD LLC policies pertaining to marijuana waste include, but are not limited to, the following:

1. GOOD LLC will not produce or maintain quantities of marijuana products in excess of what is needed for normal, efficient operation and to meet the needs of customers who obtain their products from GOOD LLC's retail facility and other licensees.

2. Prior to disposal, marijuana waste will be securely stored in a locked compartment that is located in an area under video surveillance and kept quarantined from all usable derivative products, marijuana plant material, or in process materials in order to prevent contamination.

3. Prior to disposal, marijuana waste will be rendered unusable via the methods set forth in this response. All marijuana waste will be returned to the secure storage location immediately after being rendered unusable.

4. After being rendered unusable, mixed marijuana waste will be securely stored until it is transported by an approved hauler to a approved compost facility.

5. GOOD LLC will dispose of marijuana waste in the manner set forth herein until the Board specifies an approved method of marijuana waste disposal. GOOD LLC will appropriately revise all related procedures and comply with the Board's approved method immediately after it is identified.

6. The secure area used for the storage and mixing of marijuana waste will be securely locked and protected from unauthorized entry, other than during the time required to move or render marijuana unusable, or prepare mixed waste for transport to the specified disposal facility.

7. Marijuana waste will be stored and disposed of in a manner that minimizes the development of odors that could present a public nuisance.

8. Marijuana waste will be stored and disposed of in a manner that minimizes the potential for such waste to attract, harbor, or become a breeding place for pests.

9. Marijuana waste will be stored and disposed of in a manner that protects against contamination of marijuana derivative products, contact surfaces, production areas, water supplies, and grounds surrounding the facility.

10. Marijuana waste will be stored and disposed of in a manner that prevents diversion, theft, or loss of marijuana plant material and derivative products.

11. Marijuana waste will be stored and disposed of in a manner that ensures traceability through internal documentation and real-time electronic tracking in the ADPS.

12. All marijuana waste on the premises of the manufacturing facility will be stored in a secured and locked container within an area covered by continuous video surveillance.

13. All marijuana waste and waste disposal activities will be recorded in GOOD LLC's ADPS and in GOOD LLC's internal Waste Disposal Log. These records will be maintained in an electronic format for a five (5) year period and will be made available for inspection upon request by the Department, and, when necessary for investigative purposes by law enforcement agencies.

Documentation of Marijuana Waste Disposal

In order to assure that unusable marijuana product is properly disposed of and not diverted or stolen, GOOD LLC will implement a number of internal security controls in addition to Board mandated security provisions.

1. Immediately prior to mixing and disposal, all marijuana waste and unusable product will be weighed on a calibrated scale that is integrated with the ADPS and recorded in the inventory tracking module. The Inventory Manager will perform these duties in an area under continuous video surveillance.
2. Mixing will be carried out by an Agent in a limited access area under video surveillance, under the supervision of the Inventory Manager.
3. Marijuana waste prior to and after mixing will be securely stored in a limited access area that is subject to continuous video surveillance until removal for transportation to an approved compost facility.
4. At multiple points in the waste disposal process, the Inventory Manager will record key items in the Waste Disposal Log and in the ADPS, including:
   a. Plant, batch, or lot identifier of the marijuana derivative product or marijuana plant material to be disposed;
   b. Quantity of marijuana waste added to waste container;
   c. A description of and reason for the marijuana waste being disposed of, including, if applicable, the number of failed or otherwise unusable marijuana plants or production batches;
   d. Weight of mixed waste when entered into storage;
   e. Weight of mixed waste when removed from storage;
   f. Waste container identification number, if applicable;
   g. Method of disposal;
   h. Date of disposal;
   i. Confirmation that the marijuana was rendered unusable before disposal; and
   j. The name and identification number of the Inventory Manager.
5. All records will be kept for a minimum five (5) years and made available to the Department upon request

GOOD LLC will strive to produce an appropriate quantity of marijuana derivative products to meet the projected demand of GOOD LLC's customers. The Inventory Manager, in coordination with the Product Manufacturing Manager, will determine the quantity of marijuana manufactured products to produce based on the GOOD LLC's customer base. The explicit goal of such projections is to avoid excess production, which poses an additional security risk and results in financial loss due to disposal of excess product that degrades in storage over time. Though GOOD LLC aims to avoid overproduction, any

marijuana that is not needed for normal, efficient operation in order to serve the projected needs of the customers will be disposed of in accordance with the procedures set forth herein. The Manufacturing Manager will determine and document the need for excess marijuana inventory disposal in coordination with the Inventory Manager.

The Inventory Manager and Quality Control Team are responsible for ensuring the quality and safety of marijuana products in GOOD LLC inventory on a daily basis. The Inventory Manager, in coordination with the Quality Control Team will ensure that marijuana derivative products that are expired, contaminated, or have been subjected to improper storage conditions, including, without limitation, extremes in temperature, humidity, smoke, fumes, pressure, age or radiation due to natural disasters, fires, accidents or equipment failures, are securely stored in a limited access area that is separate from storage areas of unadulterated product.

All marijuana products that are determined to be unsafe for human consumption for any of the above reasons will be rendered unusable and disposed of in accordance with the marijuana waste disposal procedures described in this Plan. Reporting, recording, management oversight, multi-agent verification, and video surveillance will discourage the diversion or theft of unusable plant material or finished manufactured products on the part of GOOD LLC agents.

The discharge, release, or misuse of a hazardous material may pose a significant threat to public health and safety. GOOD LLC will develop and adhere to a Hazardous Materials Response Plan in the event of a spill, release, or accident involving hazardous material in an effort to minimize or prevent public and environmental harm. The Response Plan will cover efforts to mitigate the incident including containment and disposal of the hazardous material, cleansing and decontamination of the area affected by the spill or accident, and investigation of the occurrence.

The Compliance Committee will be assigned responsibility for confirming the occurrence of an incident requiring the execution of the protocol and for ensuring the response protocol is followed.

GOOD LLC will immediately notify appropriate law enforcement authorities and the Alaska Department of Environmental Protection after the discovery of a reportable incident. Measures for incident reporting in accordance with state laws and regulations will be comprehensively detailed in the Response Plan. All incident activities will be documented and all documentation related to a reportable incident will be maintained for no less than one year and made available, upon request, to the Alaska Department of Environmental Protection, the Department, and to law enforcement authorities acting within their lawful jurisdiction.

Section 7: Testing

Pursuant to 3 AAC 306.550, GOOD LLC will contract with an independent testing laboratory ("laboratory") to analyze product samples in accordance with, or exceeding, the most current version of the cannabis inflorescence monograph published by the American Herbal Pharmacopeia ("AHP").

GOOD LLC will ensure that, upon successful completion of a validation process, it selects and utilizes an independent testing laboratory ("laboratory") that has adopted a standard operating procedures to test medical cannabis and medical cannabis concentrate that is approved by an accreditation body that is a signatory to the International Laboratory Accreditation Cooperation ("ILAC") Mutual Recognition Arrangement. The GOOD LLC will select a laboratory registered with the state to perform statistically valid sampling methods to test, evaluate, and analyze product lot samples to determine if pre-condition requirements established by the Commission and intended product specifications are met, prior to beginning operations at the licensed premises. Upon licensure, the Compliance Committee will review a list of those laboratories approved and registered by the State and develop a scoring rubric to compare each based on team qualifications, testing experience, pricing, services offered, sampling methods, testing limitations and proximity, and select the highest scorer. The selection process and updating the rubric will occur annually at a minimum.

Upon request, the selected independent testing laboratory will send a representative to GOOD LLC's licensed product manufacturing facility to collect samples of each finished product lot. The samples will be transported to the independent testing laboratory and analyzed in accordance with scientifically valid methods. The analytical tests conducted will be appropriate for determining whether the lot meets the intended specifications for the product. The independent testing laboratory will then provide GOOD LLC with a certificate of analysis for each tested lot, which provides results and a statement as to whether the lot meets pre-determined specifications. A lot may not be released for distribution by the Quality Control Team prior to receipt and confirmation of a certificate of analysis, which demonstrates conformance with specifications. All certificates of analysis will be uploaded and assigned to the corresponding lot in the Automated Data Processing System and maintained for a minimum of five years.

GOOD LLC will ensure it selects and utilizes an independent testing laboratory ("laboratory") that has adopted a standard operating procedure to test medical cannabis products that is approved by an accreditation body that is a signatory to the International Laboratory Accreditation Cooperation Mutual Recognition Arrangement. The Compliance Committee will select a laboratory registered with the state to perform statistically valid sampling methods to test, evaluate, and analyze cannabis lot samples to determine if pre-condition requirements established by the Commission and intended product specifications are met, prior to beginning operations at the licensed premises.

Upon licensure, the compliance committee will review a list of those laboratories approved and registered by the State, request sampling and testing methodology standard operating procedures for review, and develop a scoring rubric to compare each based on team qualifications, testing experience, pricing, services offered, sampling methods, testing limitations and proximity, which will be compared against industry best practices by GOOD LLC. The selection process and updating the rubric will occur annually at a minimum. The Quality Control Team will verify sampling and testing methods on the licensed premises.

GOOD LLC will require the laboratory contracted and utilized for medical cannabis sampling and testing services include in their services agreement, and be bound to requirements, that a certificate of analysis for each lot, with supporting data, will be issued to GOOD LLC's Quality Control Team to report whether or not the lot conforms to the specifications for the lot of the following compounds: Δ9-Tetrahydrocannabinol (THC), Tetrahydrocannabinolic Acid (THCA), Cannabidiol (CBD), Cannabidiolic Acid (CBDA), the terpenes described in the most recent version of the cannabis Inflorescence monograph published by the American Herbal Pharmacopeia (AHP), Cannabigerol (CBG), and Cannabinol (CBN).

If the batch/lot meets all specifications it will be approved for further processing, packaging and distribution to a licensed retail marijuana facility. If the certificate of analysis for a lot is returned, with supporting data, to report that the lot does not conform to the specifications, the Quality Control Team will ensure the retention sample for the lot in question will be tested by a second independent test lab. If the second certificate of analysis confirms the product does not meet the intended specifications it will be destroyed and disposed of according to GOOD LLC's Waste Management Plan, unless it can be reworked in rare cases approved by the executive management. The facility manager will verify analyses of samples performed by the laboratory to ensure accordance with the guidelines set forth by the AHP, quarterly at a minimum. GOOD LLC will require the laboratory contracted and utilized for medical cannabis sampling and testing services include in their services agreement, and be bound to requirements, that a certificate of analysis, with supporting data, will be issued and provided to GOOD LLC's Quality Control Team for each lot test accomplished.

Additionally, GOOD LLC will ensure that independent testing laboratories contracted include in their services agreement that all testing sample remains will be destroyed in accordance with State regulations. The laboratory will be required to provide a written description of the quantity of the sample used and disposed of in the analysis, as well as the timing and method of waste disposal. Each certificate of analysis will be uploaded to GOOD LLC's Automated Data Processing System in the corresponding batch record.

Testing: Extracts

Policy and Procedure

1. The storage areas and storage containers are color coded to distinguish the shelves used for quarantined product, product released for sale and product to be rendered unusable. The manufacturing facility Product Manufacturing Manager is responsible for ensuring adherence to the following storage management policy and procedure:
2. Once the extraction process is complete remove one 0.5-gram sample from each batch and place the samples inside a sample jars and label appropriately;
3. Place the remainder of the batch (everything except the sample) on the "Quarantine" shelf and complete the Product into Quarantine Log. The Extraction Manager must initial the log and approve all products moved into quarantine;
4. Complete the appropriate inventory control procedure in the Automated Data Processing System ("ADPS");
5. Manifest the sample to a licensed testing facility:

a. For a passing test, move the remainder of the product batch from the "Quarantine" shelf to the "Pass – Released for Sale" shelf and complete the Product Released for Sale Log. The Extraction Manager must initial the log and approve all products released for sale; and

b. For a failing test, move the remainder of the product batch from the "Quarantine" shelf to the "Fail – Quarantine for Destruction" shelf and complete the Failed Product for Destruction Log. The Extraction Manager must initial the log and approve all products quarantined for destruction:

    i. The product on the "Fail – Quarantine for Destruction" shelf must be rendered unusable and destroyed according to the requirements listed in the procedure for "Waste Disposal."

6. Complete the appropriate inventory control procedure in the ADP/POS system;
7. Label all products with exact weight and batch number prior to storing; and
8. Complete all cleaning and sanitation procedures.

REFERENCES

Figure 1: Garmat Extraction Booth	
Figure 2: Emotek Obe Dos Closed- Loop Extractor System	
Figure 3: Caresaver Refrigerant Recovery System	
Figure 4: CascadeTEK TVO-2 Vacuum Oven	

Figure 5: Edwards E2M30 Vacuum Pump	
Figure 6: Intertek Electric Glycol Chiller (Chiller Tayfun H35G, 1/3rd horsepower, Totton)	
Figure 7: Butane Tank Storage	
Figure 8: Isopropyl Alcohol Storage	

Pre-Procedure Log

Complete this log before the extraction procedure begins.

Date In	Product	Production Date	Lot #	Batch #	Date Failed	Production Manager Initials	Approved for Destruction Y/N	Date Out

Post-Procedure Log

Complete this log after the extraction procedure is complete.

Client Name	**Date and Time of Packaging**	**Batch / Lot No.**	**Strain(s)**	**Final Weight (grams)**	**Yield %**	**Aesthetic qualities of product**	**Duration spent drying** (if flowers)	**Duration spent curing** (if flowers)	**Remove 0.5 grams for testing** (agent initials)	**Date of expected delivery**	E

Waste Disposal Log

Use this log and follow Waste Disposal Procedures to record waste disposal in accordance with state requirements.

Date	**Time of Disposal**	**Agent ID #**	**Reason for Disposal** *Choose one: (Expired, Contaminated, Unusable Product, Returned Product, By-product, Other (explain))*	**Lot, Batch, or Plant Identifier**	**Type of Disposal** *Choose one: (Internally added to waste container, Transfer to waste disposal facility, Transfer to compost facility, Theft, Other (explain))*	**Weight of Marijuana Product Added to Disposal Container**	**Notes**

Quarantine Log

Complete this log for each product batch or lot moved into quarantine storage.

Date In	Product	Production Date	Lot #	Batch #	Production Manager Initials	Passed QA Lab Tests (Y / N)	Date Out

Product Released for Sale Log

Complete this log for each product batch or lot approved by the Production Manager to be released for Sale.

Date In	Product	Production Date	Lot #	Batch #	Production Manager Initials	Passed QA Lab Tests (Y / N)	Date Out

Failed Product for Destruction Log

Complete this log for each product batch or lot failing the QA lab test and to be destroyed/rendered unusable.

Date In	Product	Production Date	Lot #	Batch #	Date Failed	Production Manager Initials	Approved for Destruction Y/N	Date Out

Package Examination Log

The Extraction Agent shall use this log to document all packaging and labeling examinations. The examining Extraction Agent may not be the Extraction Agent who originally packaged or labeled the product.

Date: _____
Agent Name: _____
Agent Registration Card No.: _____
Product Name: _____
Batch or Lot No.: _____
Batch Quantity: _____
Representative Sample Quantity: _____

Does each label on each container included in the representation sample contain the following information?
Check "Yes" or "No"

YES	NO	LABEL REQUIREMENT
		The text used on all labeling is printed in at least 10-point font and may not be in italics.
		Each label is at least 2 3/4 inches high by 4 inches wide.
		The name of the medical marijuana establishment and its medical marijuana establishment registration certificate number is listed.
LABEL CONTENTS		
		The lot number.
		The date of harvest.
		The date of final testing.
		The date on which the product was packaged.
		The cannabinoid profile and potency levels and terpenoids profile as determined by the independent testing laboratory.
		If the product is perishable, the expiration dates.
		The quantity of marijuana being sold.