Alcohol and Marijuana Control Office
550 W 7th Avenue, Suite 1600
Anchorage, AK 99501
marijuana.licensing@alaska.gov
https://www.commerce.alaska.gov/web/amco
Phone: 907.269.0350

Alaska Marijuana Control Board

Form MJ-01: Marijuana Establishment Operating Plan

What is this form?

An operating plan is required for all marijuana establishment license applications. Applicants should review **Title 17.38** of **Alaska Statutes** and **Chapter 306** of the **Alaska Administrative Code.** This form will be used to document how an applicant intends to meet the requirements of those statutes and regulations. If your business has a formal operating plan, you may include a copy of that operating plan with your application, but all fields of this form must still be completed per 3 AAC 306.020(c).

What must be covered in an operating plan?

Applicants must identify how the proposed premises will comply with applicable statutes and regulations regarding the following:

- Security
- Inventory tracking of all marijuana and marijuana product on the premises
- Employee qualification and training
- Waste disposal
- Transportation and delivery of marijuana and marijuana products
- Signage and advertising
- Control plan for persons under the age of 21

RECEIVED
AUG 03 2016
ALCOHOL MARIJUANA CONTROL OFFICE
STATE OF ALASKA

Applicants must also complete the corresponding operating plan supplemental forms (**Form MJ-03, Form MJ-04, Form MJ-05,** or **Form MJ-06)** to meet the additional operating plan requirements for each license type.

Section 1 – Establishment Information

Enter information for the business seeking to be licensed, as identified on the license application.

Licensee:	EINSTEIN ENTERPRISES, INC.	**License Number:**	10082		
License Type:	Marijuana Product Manufacturing Facility				
Doing Business As:	EINSTEIN LABS				
Premises Address:	2939 Porcupine Drive Suite B				
City:	Anchorage	**State:**	ALASKA	**ZIP:**	99501-3118

Mailing Address:	18621 N Lowrie Loop				
City:	Eagle River	**State:**	ALASI	**ZIP:**	99577-8690

Primary Contact:	Justin Roland		
Main Phone:	(907) 350-5242	**Cell Phone:**	Same
Email:	einsteinlabsak@gmail.com		

Alcohol and Marijuana Control Office
550 W 7th Avenue, Suite 1600
Anchorage, AK 99501
marijuana.licensing@alaska.gov
https://www.commerce.alaska.gov/web/amco
Phone: 907.269.0350

Alaska Marijuana Control Board

Form MJ-01: Marijuana Establishment Operating Plan

Section 2 – Security

Review the requirements under 3 AAC 306.710 – 3 AAC 306.720 and 3 AAC 306.755, and identify how the proposed premises will meet the listed requirements.

RECEIVED
AUG 03 2016
ALCOHOL MARIJUANA CONTROL OFFICE
STATE OF ALASKA

Describe how the proposed premises will comply with each of the following:

Restricted Access Areas (3 AAC 306.710):

Describe how you will prevent unescorted members of the public from entering restricted access areas:

As part of our commitment to the security of our employees, community and overall public safety (as outlined in the Cole Memorandum, 2013), Einstein Labs will maintain a comprehensive security plan that will focus on ensuring the overall premises and restricted access areas as outlined in 3 AAC 306.710(a) are under surveillance, access is limited to authorized individuals and the premises is safe and secure at all times. A number of methods will be utilized together to help ensure that unescorted members of the public do not enter any restricted access areas.

See Attachment A for Continued Information

Describe your processes for admitting visitors into and escorting them through restricted access areas:

Ultra-Electronics 30 ML CR80 access security cards will be issued to Einstein Labs licensee or authorized employee, and to visiting law enforcement personnel including an agent of the Board, allowing for limited access to restricted areas. All other personnel will be issued a non-technological badge limiting their access to restricted access areas and visitors will abide by the processes below.

Visitors will be admitted into the premises in accordance with 3 AAC 306.710(c). All visitors will be required to provide a valid photo identification as outlined by 3 AAC 306.350 to assess age and ability to enter the premises and includes; an unexpired, unaltered passport, an unexpired, unaltered drivers license; instruction permit, or identification card of any state or territory of the United States, the District of Columbia or a province of Canada or an identification card issued by a federal or state agency authorized to issue a driver's license of identification card.

See Attachment B for Continued Information

Alcohol and Marijuana Control Office
550 W 7th Avenue, Suite 1600
Anchorage, AK 99501
marijuana.licensing@alaska.gov
https://www.commerce.alaska.gov/web/amco
Phone: 907.269.0350

Alaska Marijuana Control Board

Form MJ-01: Marijuana Establishment Operating Plan

(Additional Space as Needed):

Attachment A Prevention of Unescorted Members of the Public in R. Access Areas:

Pursuant to 3 AAC 306.710 ©(2) individuals visiting the facility obtain a visitor identification badge before entering the restricted access area, be required to follow visitor policy and procedures and be assigned to a designated authorized employee directly responsible for escorting the visitor while in all restricted access areas. All individuals attempting to be visitors will be required to provide a valid photo identification as outlined in 3 AAC 306.350 to assess age and ability to enter the premises and included; an unexpired, unaltered passport, an unexpired, unaltered drivers license; instruction permit, or identification card of any state or territory of the United States, the District of Columbia or a province of Canada or an identification card issued by a federal or state agency authorized to issue a driver's license of identification card.

Visitors to the premises will be supervised at all times by an authorized employee and no more than five (5) visitors will be allowed per each employee at a time (3 AAC 306.710 (b). All visitors will be required to sign non-disclosure agreements, visitor agreement and will be stored in the visitor record with the following information per 3 AAC 306.755(6); name, date, time in and out, copy of identification and signature of supervising employee. Each employee will be trained on the importance of direct supervision of individuals assigned to them and that negligently leaving a visitor unescorted in a restricted access area can lead to termination.

Ultra- Electronics 30 ML CR80 access security cards will be issued to law enforcement personnel including an agent of the board allowing for limited access to restricted access areas as needed for specific authorized purposes and will be escorted at all times by an authorized employee. Individuals attempting to enter a restricted access area without permission or supervision will be asked to leave the premises immediately to avoid law enforcement involvement.

Video Surveillance equipment, security alarm features such as security door contacts and locks on entrance and exits to the property that will trip the alarm if the door contact it activated, and interior & exterior video surveillance will be used to monitor and determine if an individual has attempted to access a restricted access areas unescorted and will be used to support overall monitoring of individuals access to restricted access areas.

RECEIVED
AUG 03 2016
ALCOHOL MARIJUANA CONTROL OFFICE
STATE OF ALASKA

Alcohol and Marijuana Control Office
550 W 7th Avenue, Suite 1600
Anchorage, AK 99501
marijuana.licensing@alaska.gov
https://www.commerce.alaska.gov/web/amco
Phone: 907.269.0350

Alaska Marijuana Control Board

Form MJ-01: Marijuana Establishment Operating Plan

(Additional Space as Needed):

Attachment B Process for Admitting Visitors & Escorting in R. Areas Continued (2):

RECEIVED
AUG 19 2016
ALCOHOL MARIJUANA CONTROL OFFICE
STATE OF ALASKA

Identification badges, visitor passes, keys and security codes are issued through the ownership or management team, are the sole property of Einstein Labs and can be revoked at any time due to inappropriate use. Identification badge may not be duplicated or loaned to anyone at any time.

Alcohol and Marijuana Control Office
550 W 7th Avenue, Suite 1600
Anchorage, AK 99501
marijuana.licensing@alaska.gov
https://www.commerce.alaska.gov/web/amco
Phone: 907.269.0350

Alaska Marijuana Control Board

Form MJ-01: Marijuana Establishment Operating Plan

(Additional Space as Needed):

Attachment B Process for Admitting Visitors & Escorting in R. Areas Continued:

If any of the documentation appears to be fraudulent, is not valid or appears suspicious, the individual will be asked to leave the premises and will not be allowed to enter the facility or secure side yard.

Visitors to the premises will be supervised at all times by an authorized employee and no more than five (5) visitors will be allowed per each employee at a time (3 AAC 306.710 (b). All visitors will be required to sign non-disclosure agreements, visitor agreement and will be stored in the visitor record with the following information per 3 AAC 306.755(6); name, date, time in and out, copy of identification and signature of supervising employee. Visitors will include; Marijuana Control Board staff and/or Directors, Peace Officers, Law enforcement personnel, Landlord (as applicable), contracted service personnel, vender delivery personnel, potential employees, vender/suppliers and consultants.

Visitor Agreement: Visitors will be given instructions regarding not touching equipment or entering in any area that the supervising employee has not designated as a visiting area. Visitors will not be allowed to take pictures of the facility unless authorized by management and will sign an agreement attesting to the above information.

Visitors will abide by all sanitation requirements including; food& kitchen health and safety, entry procedures (i.e. antibacterial procedures, changing into provided sanitary coats, footwear, and caps as applicable), exit procedures (i.e. entering changing room, removing provided sanitary clothing, gathering items and immediately exiting the building) and informing company of any illnesses that could affect the sanitation of the overall manufacturing facility as applicable to 3 AAC 306.545.

Visitor passes will be provided to individuals over the age of 21 (with valid identification) accessing the building due to marijuana related business. Marijuana establishments delivering or picking up marijuana will be required to provide a valid marijuana handlers card, their marijuana establishments identification badge, will receive a visitors pass and will be escorted by authorized personnel at all times. Visitor Badge sample below:

RECEIVED
AUG 03 2016
ALCOHOL MARIJUANA CONTROL OFFICE
STATE OF ALASKA

Alcohol and Marijuana Control Office
550 W 7th Avenue, Suite 1600
Anchorage, AK 99501
marijuana.licensing@alaska.gov
https://www.commerce.alaska.gov/web/amco
Phone: 907.269.0350

Alaska Marijuana Control Board

Form MJ-01: Marijuana Establishment Operating Plan

Describe your recordkeeping of visitors who are escorted into restricted access areas:

All visitors escorted into restricted access areas will be required to sign non-disclosure agreements, a visitor agreement and will be stored in the visitor record with the following information pursuant to 3 AAC 306. 755(6); name, date, time in and out, copy of photo identification, organization affiliation (as applicable), restricted access area(s) accessed and signature of supervising employee & visitor. Marijuana Control Board staff and/or Directors, Peace Officers, Law enforcement personnel, Landlord (as applicable), contracted service personnel, vender delivery personnel, potential employees, vender/suppliers and consultants.

See Attachment C for Continued Information

Provide a copy of a sample identification badge to be displayed by each licensee, employee, or agent while on the premises:

During work hour's employees will be required to carry an identification badge issued by Einstein Labs that is visible and identifies the employee by name and picture pursuant to 3 AAC 3-6.710(c). Employees are responsible for maintaining the security of their identification badges after hours by not leaving it visible to the public (i.e. vehicles) and are responsible for notifying management immediately if their badge, food handlers card or marijuana handlers card is lost or stolen at which point management personnel will make a note in the employee file, issue a new card with a new employee identification number. Identification badges will be issued the first day of employment and will be issued to full-time part-time and temporary employees.

Badge sample below:

RECEIVED
AUG 19 2016
ALCOHOL MARIJUANA CONTROL OFFICE
STATE OF ALASKA

Alcohol and Marijuana Control Office
550 W 7th Avenue, Suite 1600
Anchorage, AK 99501
marijuana.licensing@alaska.gov
https://www.commerce.alaska.gov/web/amco
Phone: 907.269.0350

Alaska Marijuana Control Board

Form MJ-01: Marijuana Establishment Operating Plan

(Additional Space as Needed):

Attachment C Recordkeeping of Visitors in the Restricted Access Areas Continued:

Visitor Agreement: Visitors will be given instructions regarding not touching equipment, food or marijuana products or entering in any area that the supervising employee has not designated as a visiting area. Visitors will not be allowed to take pictures of the facility unless authorized by management and will sign an agreement attesting to the above information.

Visitor records will be maintained per Einstein Labs Record Retention Policy specifically Section 8: Document Retention Schedule as noted below:

Visitor Log (includes information stated above) Retention Period: Permanent

As required by 3 AAC 306.755- all business records that are six (6) months or newer will be maintained and kept in a dale and secured, locked cabinet in the office at the licensed premises.

All MCB requests for visitor documents shall be diligently and quickly complied with- in the event a record is older than six (6) months and requested by the MCB, Einstein Labs will provide the record to the MCB within three (3) business days of request.

RECEIVED
AUG 03 2016
ALCOHOL MARIJUANA CONTROL OFFICE
STATE OF ALASKA

Alcohol and Marijuana Control Office
550 W 7th Avenue, Suite 1600
Anchorage, AK 99501
marijuana.licensing@alaska.gov
https://www.commerce.alaska.gov/web/amco
Phone: 907.269.0350

Alaska Marijuana Control Board

Form MJ-01: Marijuana Establishment Operating Plan

Security Alarm Systems and Lock Standards (3 AAC 306.715):

Exterior lighting is required to facilitate surveillance. Describe how the exterior lighting will meet this requirement:

Exterior lighting consists of floodlights that will be placed high on each side of the building that will allow for lighting in all exterior areas of the premises when motion has been detected (See diagram below for placement). Two (2) lights will be placed on each short end of the building and three (2) will be placed on each long end of the building. Light specifications below:

Ten (10)- LPP Energies, High Power 250w LED Floodlight (or comparable)

See Attachment D for Continued Information

An alarm system is required for all license types. Describe the security alarm system for the proposed premises:

The Cole Memorandum outlined by the Office of the Deputy Attorney General (2013) asks that marijuana establishments prevent the use of violence in the manufacturing and distribution of marijuana. In order to address this area of concern and other community safety concerns, Einstein Labs will rely on an alarm system, video surveillance equipment, security monitoring as well as other awareness skills to protect the overall premise and exposure to minors under the age of 21 years.

See Attachment E for Continued Information

The alarm system must be activated on all exterior doors and windows when the licensed premises is closed for business. Describe how the security alarm system meets this requirement:

The last employee leaving the building, at the end of their shift, will activate the alarm system on all exterior doors (there are no windows on the building). The employee is required to ensure all doors (including the side yard gate) are closed, locked and secured as necessary to ensure the alarm system can be activated. The alarm system will be monitored by a third party agency.

See Attachment F for Continued Information

RECEIVED
AUG 0 3 20
ALCOHOL MARI
STATE OF A

Alcohol and Marijuana Control Office
550 W 7th Avenue, Suite 1600
Anchorage, AK 99501
marijuana.licensing@alaska.gov
https://www.commerce.alaska.gov/web/amco
Phone: 907.269.0350

Alaska Marijuana Control Board

Form MJ-01: Marijuana Establishment Operating Plan

(Additional Space as Needed):

Attachment E Alarm System Continued:

Pursuant to 3 AAC 306.715(c)(2) in which a security alarm system is required on all exterior doors and windows; and The Licensed Facility will have:

a. Honeywell Intrusion security package installed consisting of the following equipment:2-6160 Keypads (located in main entrance to each building), 3-Aurora PIR motion detectors, Wave2 2-Tone Sounder, 467 Battery, 620 Jack and 621 Cord and additional Commercial Overhead door Contacts. 3 Panic buttons will be remotely located within the licensed premises for added security.

b. Honeywell sensors with: Advanced ASIC-based processing, Split-zone optics technology, Totally silent relay operation, Immune to pets up to 40 lbs, Tamper proof design, PIR motion sensor with an Ultra-low current.

c. 1-Zone Expanders will be utilized for the size and scope of security plan

d. Security system will be monitored by a third party monitoring agency 24/7. In the event of an alarm activation local law enforcement and the business owner will be notified.

e. 1-H.265 NVR 32 Channel, 4xDD Server

RECEIVED
AUG 03 2016
ALCOHOL MARIJUANA CONTROL OFFICE
STATE OF ALASKA

Alcohol and Marijuana Control Office
550 W 7th Avenue, Suite 1600
Anchorage, AK 99501
marijuana.licensing@alaska.gov
https://www.commerce.alaska.gov/web/amco
Phone: 907.269.0350

Alaska Marijuana Control Board

Form MJ-01: Marijuana Establishment Operating Plan

(Additional Space as Needed):

Attachment F Alarm System on Exterior Doors When Business Closed Continued:

The third party agency, AlarmWATCH (or comparable) certifications include IQ Certified Central Station (One of first in nation), UL Certified Facility, UL Certified Operators, SIA Certified Operators., SIA Central Station Trained Instructors, APCO Certified Operators and - FARA and Federal UL 2050. Supporting Alarm Communications and Interactive Service from Every Major Manufacturer; The list includes Connect 24, C24 Interactive, AlarmNET, AES, Uplink, DMP Internet, Tellular, Alarm.com. Based in Maryland with monitoring centers nationwide that are staffed 24 hours a day, 7 days a week.

During non-business hours monitoring of all devices (Motion Detectors, door contacts and GE Glass break detectors) within the system will be active and monitored. In the event of a security breach of the licensed premises an exterior as well as interior sounder will be activated immediately, an alarm signal will be received by the monitoring center who will notify security, local law enforcement and the licensee.

RECEIVED
AUG 03 2016
ALCOHOL MARIJUANA CONTROL OFFICE
STATE OF ALASKA

Alcohol and Marijuana Control Office
550 W 7th Avenue, Suite 1600
Anchorage, AK 99501
marijuana.licensing@alaska.gov
https://www.commerce.alaska.gov/web/amco
Phone: 907.269.0350

Alaska Marijuana Control Board

Form MJ-01: Marijuana Establishment Operating Plan

Describe your policies and procedures for preventing diversion of marijuana or marijuana product:

Owners, employees, visitors and other individuals will be held to a zero tolerance policy on the diversion of marijuana (3 AAC 306.715(c)(1)). The electronic tracking system will be used to ensure diversion of marijuana does not occur throughout the normal processes of the manufacturing facility. Marijuana will be entered into the system and tracked throughout the manufacturing, packaging, testing, disposal and selling process. If the tracking system shows potential diversion of product, authorized personnel will initiate an investigation that will include; talking to employees on shift, assessing last log-in into the system and product in question, notifying the Marijuana Control Board and reviewing video feed.

See Attachment G for Continued Information

Describe your policies and procedures for preventing loitering:

Einstein Labs will operate under a no loitering policy that will limit individuals from standing or waiting without purpose on or around the premises as pursuant to 3 AAC 306.715(c)(2). Security and authorized employees will perform routine but unscheduled patrols in order to assess potential loitering situations. Loiterers will be asked to leave when discovered and law enforcement will be called if continued loitering persists. During business hours employees will be provided training on the importance of limiting loitering and learn skills to verbally remove individuals from the premises.

See Attachment H for Continued Information

Describe your policies and procedures regarding the use of any additional security device, such as a motion detector, pressure switch, and duress, panic, or hold-up alarm to enhance security of the proposed premises:

Einstein Labs policy and procedure regarding the use of additional security devise is noted below as part of the overall alarm and security system of the facility.

a. Motion detectors will be activated and utilized for after hours monitoring of the licensed premises. Motion sensors will be located in the main manufacturing rooms, kitchen, hallways and general areas.

See Attachment I for Continued Information

RECEIVED
AUG 0 1 2016
ALCOHOL MARIJUANA CONTROL OFFICE
STATE OF ALASKA

Alcohol and Marijuana Control Office
550 W 7th Avenue, Suite 1600
Anchorage, AK 99501
marijuana.licensing@alaska.gov
https://www.commerce.alaska.gov/web/amco
Phone: 907.269.0350

Alaska Marijuana Control Board

Form MJ-01: Marijuana Establishment Operating Plan

(Additional Space as Needed):

Attachment G Marijuana Diversion Policy & Procedure Continued:

Visitors will be monitored by authorized employees at all times to ensure diversion of marijuana does not occur as well as activities in restricted areas will be video monitored and stored for at least forty (40) days as required by the Board.

In addition to the above, authorized personnel will randomly check video feed for potential diversion (1x per week), will supervise all visitors and require them to remain in the building until law enforcement arrives if diversion is suspected, restrict access to restricted areas where marijuana or cash are present as well as will provide information pertaining to the consequences of breaking the policy. Consequences include notifying law enforcement, immediate termination, visitor access removal and prosecution of crimes.

RECEIVED
AUG 03 2016
ALCOHOL MARIJUANA CONTROL OFFICE
STATE OF ALASKA

Alcohol and Marijuana Control Office
550 W 7th Avenue, Suite 1600
Anchorage, AK 99501
marijuana.licensing@alaska.gov
https://www.commerce.alaska.gov/web/amco
Phone: 907.269.0350

Alaska Marijuana Control Board

Form MJ-01: Marijuana Establishment Operating Plan

(Additional Space as Needed):

Attachment H Loitering Policy & Procedures Continued:

If individuals are unwilling to leave the premises or continue to loiter in the general area, law enforcement/peace officers will be notified and employees will follow the recommendations of law enforcement. Authorized employees will check the exterior camera feed once (1) per week to assess situations that appear to be a pattern of loitering (ex. Unauthorized individual attempting to access the premises more than once) and notify management at which point management will contact law enforcement or its security provider to assess potential threats.

Employees will not engage in discussions with minors or other individuals outside the building about the marijuana establishment, around the establishment or to promote marijuana use to individuals under the age of 21 years. The exterior building will have "No Loitering" signs placed on the front of the building as well as on the front fence of the side yard. Loitering will be defined as; to stand or wait around idly or without apparent purpose.

RECEIVED
AUG 03 2016
ALCOHOL MARIJUANA CONTROL OFFICE
STATE OF ALASKA

Alcohol and Marijuana Control Office
550 W 7th Avenue, Suite 1600
Anchorage, AK 99501
marijuana.licensing@alaska.gov
https://www.commerce.alaska.gov/web/amco
Phone: 907.269.0350

Alaska Marijuana Control Board

Form MJ-01: Marijuana Establishment Operating Plan

(Additional Space as Needed):

Attachment I Additional Security Features Policy & Procedure Continued:

b. Duress and panic switches will be easily accessible to facilitate a response to public & employee safety and security in an efficient manner and will only be known and utilized by licensee(s), employees and agents during business hours.

c. All key pads will be programmed with a silent medical and fire duress option to alert medical personnel or firefighters in the event of a medical emergency or fire.

d. Individual employee fobs will be worn by authorized employees at all times, including employees designated for transporting marijuana, and will be activated in the event of a security breach in progress.

e. Any use of the duress or panic buttons will notify the monitoring center by silent alarm, giving the appropriate agency information that a security breach is in progress and to use extreme caution when approaching.

RECEIVED
AUG 03 2016
ALCOHOL MARIJUANA CONTROL OFFICE
STATE OF ALASKA

Alcohol and Marijuana Control Office
550 W 7th Avenue, Suite 1600
Anchorage, AK 99501
marijuana.licensing@alaska.gov
https://www.commerce.alaska.gov/web/amco
Phone: 907.269.0350

Alaska Marijuana Control Board

Form MJ-01: Marijuana Establishment Operating Plan

Describe your policies and procedures regarding the actions to be taken by a licensee, employee, or agent when any automatic or electronic notification system alerts a local law enforcement agency of an unauthorized breach of security:

In the case of an unauthorized breach of security, the third party monitoring company will immediately notify local law enforcement and Einstein Labs designated licensee. If the designated licensee is not on site during the unauthorized breach they will be sent a notification and arrive on-site to assist law enforcement personnel as safety permits, or if unavailable, will provide an authorized employee capable of accessing needed areas & systems to aide in the investigation. All employees will be trained on how to interact with law enforcement and maintain compliance during investigations and unauthorized breaches.

See Attachment J for Continued Information

Video Surveillance (3 AAC 306.720):

All licensed marijuana establishments must meet minimum standards for surveillance equipment. Applicants should be able to answer "Yes" to all items below.

Video surveillance and camera recording system covers the following areas of the premises:	Yes	No
Each restricted access area and each entrance to a restricted access area	■	☐
Both the interior and exterior of each entrance to the facility	■	☐
Each point of sale area	■	☐

RECEIVED
AUG 03 2016
ALCOHOL MARIJUANA CONTROL OFFICE
STATE OF ALASKA

Each video surveillance recording:	Yes	No
Is preserved for a minimum of 40 days, in a format that can be easily accessed for viewing	■	☐
Clearly and accurately displays the time and date	■	☐
Is archived in a format that does not permit alteration of the recorded image, so that the images can readily be authenticated	■	☐

Alcohol and Marijuana Control Office
550 W 7th Avenue, Suite 1600
Anchorage, AK 99501
marijuana.licensing@alaska.gov
https://www.commerce.alaska.gov/web/amco
Phone: 907.269.0350

Alaska Marijuana Control Board

Form MJ-01: Marijuana Establishment Operating Plan

(Additional Space as Needed):

Attachment J Notification During Unauthorized Breach Policy & Procedure Continued:

The licensee, all employees and agents shall assist in any way to help law enforcement by providing detailed descriptions of person/persons and events leading up to the breach in security. The licensee, employees and agents shall protect and preserve any evidence or area where the breach occurred, restricting access to the area and not disturbing anything until law enforcement arrives. Employees on-site at the time of the breach will maintain safety at all times and will not attempt to stop unauthorized individuals from entering the space or attempt to stop theft if personal safety is at risk.

RECEIVED
AUG 03 2016
ALCOHOL MARIJUANA CONTROL OFFICE
STATE OF ALASKA

Alcohol and Marijuana Control Office
550 W 7th Avenue, Suite 1600
Anchorage, AK 99501
marijuana.licensing@alaska.gov
https://www.commerce.alaska.gov/web/amco
Phone: 907.269.0350

Alaska Marijuana Control Board

Form MJ-01: Marijuana Establishment Operating Plan

Describe how the video cameras will be placed to produce a clear view adequate to identify any individual inside the licensed premises, or within 20 feet of each entrance to the licensed premises:

Video cameras will have a full view of the premises, entrance & exit of all interior and exterior doors, as well as will be placed strategically in Restricted Access Areas in order to identify individuals and provide a clear view of regular activity. Regular activities consist of areas where marijuana is produced, refined or cooked (edibles), where marijuana product is stored or stockpiled, where marijuana waste is destroyed (3 AAC 306.535), intake and general areas.

Security cameras will consist of Vivotek USA Inc FD-8169 Dome Network Cameras and Vivotek USA Inc FE8181/81V Fisheye Network Cameras.

See Attachment K for Continued Information

Describe the locked and secure area where video surveillance recording equipment and records will be housed and stored and how you will ensure the area is accessible only to authorized personnel, law enforcement, or an agent of the board:

Pursuant to 3AAC 306.720(b) Video surveillance recording equipment and records must be housed in a locked and secure area or in a lock box, cabinet, closet or other secure area that is accessible only to a marijuana establishment licensee or authorized employee, and to law enforcement personnel including an agent of the board. The establishment may also use an off-site monitoring service and off-site storage of surveillance records as long as security requirements at the off-site facility are at least as strict as on-site security requirements, as described in this section. Access to video surveillance records by authorized personnel will be logged by name, date, record accessed and time.

See Attachment L for Continued Information

Location of Surveillance Equipment and Video Surveillance Records:	Yes	No
Surveillance room or area is clearly defined on the premises diagram	■	☐
Surveillance recording equipment and video surveillance records are housed in a designated, locked, and secure area or in a lock box, cabinet, closet or other secure area	■	☐
Surveillance recording equipment access is limited to a marijuana establishment licensee or authorized employee, and to law enforcement personnel including an agent of the board	■	☐
Video surveillance records are stored off-site	☐	■

RECEIVED
AUG 03 2016
ALCOHOL MARIJUANA CONTROL OFFICE
STATE OF ALASKA

Alcohol and Marijuana Control Office
550 W 7th Avenue, Suite 1600
Anchorage, AK 99501
marijuana.licensing@alaska.gov
https://www.commerce.alaska.gov/web/amco
Phone: 907.269.0350

(Additional Space as Needed):

Attachment L Video Surveillance Record Storage Continued:

a. The security cabinet/closet in the office, housing all supporting security and camera equipment and will be locked by Access control and Hess electric strikes to ensure the integrity of all security supported hardware for the licensed facility. Authorized personnel will have the only access to the security storage area within the office.

b. The single entry point will have Access control supported with LED (green-yellow-red) and buzzer options, with temperatures ratings of -23.8°F (-31°C) to 145.4°F (63°C) and a Certification and Standards of FCC Certification that is part of a Honeywell NetAXS-123 Access Control System (or comparable).

c. To continue ensuring secured storage of video surveillance equipment in the security/office room, there will be a Vivotek USA Inc FE818/81V Fish-eye Network Camera (or comparable). VIVOTEK FE8181/81V are the latest fish-eye fixed dome network cameras from VIVOTEK, featuring a detailed 5-Megapixel resolution sensor with superb image quality. Equipped with a fish-eye lens for 180° panoramic view (wall mount) or 360° surround view (ceiling/floor/table mount) without blind spots. The FE8181/81V, true day/night cameras, feature a removable IR-cut filter, maintaining clear images 24 hours a day, with built-in IR LEDs enabling the camera to provide uniformly 360° surround illumination for clear viewing up to 10 meters, even in completely dark environments and ensures complete monitoring at all times of the secure records.

d. Outside the security/office room entrance point will be a Vivotek USA, Inc FD-8169 Dome Network Camera (or comparable) in order to ensure all those entering the area are authorized too and those entering and exiting can be clearly seen. VIVOTEK FD-8169 is a best-in-class, dome-style network camera designed for diverse indoor/outdoor applications. Equipped with a 2MP sensor enabling viewing resolution of 1920x1080 at a smooth 30 fps, the FD-8169 is an all-in-one indoor/outdoor camera capable of capturing high quality and high resolution video up to 2 Mega-pixel. In order to adapt to constantly changing outdoor lighting conditions, the FD-8169 features a removable IR-cut filter as well as IR illuminators effective up to 25M for superior image quality around the clock.

RECEIVED
AUG 03 2016
ALCOHOL MARIJUANA CONTROL OFFICE
STATE OF ALASKA

Alcohol and Marijuana Control Office
550 W 7th Avenue, Suite 1600
Anchorage, AK 99501
marijuana.licensing@alaska.gov
https://www.commerce.alaska.gov/web/amco
Phone: 907.269.0350

Alaska Marijuana Control Board

Form MJ-01: Marijuana Establishment Operating Plan

(Additional Space as Needed):

Attachment L Video Surveillance Record Storage Continued:

a. The security cabinet/closet in the office, housing all supporting security and camera equipment and will be locked by Access control and Hess electric strikes to ensure the integrity of all security supported hardware for the licensed facility. Authorized personnel will have the only access to the security storage area within the office.

b. The single entry point will have Access control supported with LED (green-yellow-red) and buzzer options, with temperatures ratings of -23.8°F (-31°C) to 145.4°F (63°C) and a Certification and Standards of FCC Certification that is part of a Honeywell NetAXS-123 Access Control System (or comparable).

c. To continue ensuring secured storage of video surveillance equipment in the security/office room, there will be a Vivotek USA Inc FE818/81V Fish-eye Network Camera (or comparable). VIVOTEK FE8181/81V are the latest fish-eye fixed dome network cameras from VIVOTEK, featuring a detailed 5-Megapixel resolution sensor with superb image quality. Equipped with a fish-eye lens for 180° panoramic view (wall mount) or 360° surround view (ceiling/floor/table mount) without blind spots. The FE8181/81V, true day/night cameras, feature a removable IR-cut filter, maintaining clear images 24 hours a day, with built-in IR LEDs enabling the camera to provide uniformly 360° surround illumination for clear viewing up to 10 meters, even in completely dark environments and ensures complete monitoring at all times of the secure records.

d. Outside the security/office room entrance point will be a Vivotek USA, Inc FD-8169 Dome Network Camera (or comparable) in order to ensure all those entering the area are authorized too and those entering and exiting can be clearly seen. VIVOTEK FD-8169 is a best-in-class, dome-style network camera designed for diverse indoor/outdoor applications. Equipped with a 2MP sensor enabling viewing resolution of 1920x1080 at a smooth 30 fps, the FD-8169 is an all-in-one indoor/outdoor camera capable of capturing high quality and high resolution video up to 2 Mega-pixel. In order to adapt to constantly changing outdoor lighting conditions, the FD-8169 features a removable IR-cut filter as well as IR illuminators effective up to 25M for superior image quality around the clock.

RECEIVED
AUG 03 2016
ALCOHOL MARIJUANA CONTROL OFFICE
STATE OF ALASKA

Alcohol and Marijuana Control Office
550 W 7th Avenue, Suite 1600
Anchorage, AK 99501
marijuana.licensing@alaska.gov
https://www.commerce.alaska.gov/web/amco
Phone: 907.269.0350

Alaska Marijuana Control Board

Form MJ-01: Marijuana Establishment Operating Plan

Business Records (3 AAC 306.755):

All licensed marijuana establishments must maintain, in a format that is readily understood by a reasonably prudent business person, certain business records. Applicants should be able to answer "Yes" to all items below.

Business Records Maintained and Kept on the Licensed Premises:	Yes	No
All books and records necessary to fully account for each business transaction conducted under its license for the current year and three preceding calendar years; records for the last six months are maintained on the marijuana establishment's licensed premises; older records may be archived on or off-premises	■	☐
A current employee list setting out the full name and marijuana handler permit number of each licensee, employee, and agent who works at the marijuana establishment	■	☐
The business contact information for vendors that maintain video surveillance systems and security alarm systems for the licensed premises	■	☐
Records related to advertising and marketing	■	☐
A current diagram of the licensed premises including each restricted access area	■	☐
A log recording the name, and date and time of entry of each visitor permitted into a restricted access area	■	☐
All records normally retained for tax purposes	■	☐
Accurate and comprehensive inventory tracking records that account for all marijuana inventory activity from seed or immature plant stage until the retail marijuana or retail marijuana product is sold to a consumer, to another marijuana establishment, or destroyed	■	☐
Transportation records for marijuana and marijuana product as required under 3 AAC 306.750(f)	■	☐

RECEIVED
AUG 03 2016
ALCOHOL MARIJUANA CONTROL OFFICE
STATE OF ALASKA

Alcohol and Marijuana Control Office
550 W 7th Avenue, Suite 1600
Anchorage, AK 99501
marijuana.licensing@alaska.gov
https://www.commerce.alaska.gov/web/amco
Phone: 907.269.0350

Alaska Marijuana Control Board

Form MJ-01: Marijuana Establishment Operating Plan

A marijuana establishment is required to exercise due diligence in preserving and maintained all required records. Describe how you will prevent records and data, including electronically maintained records, from being lost or destroyed:

Einstein Labs will maintain a strict policy regarding preserving and maintaining all required records.

1. Policy and Purposes

Purposes of the policy include (a) retention and maintenance of documents necessary for the proper functioning of the operation as well as to comply with applicable legal requirements, including, but not limited to 3 AAC 306.755; (b) destruction of documents which no longer need to be retained; and (c) guidance for the Ownership, management, and staff and other constituencies with respect to their responsibilities concerning document retention and destruction.

2. Administration

Einstein Labs CEO shall be the administrator ("Administrator") in charge of the Policy. The Administrator's responsibilities include supervising and coordinating the retention and destruction of documents pursuant to the Policy, documenting the actions taken to maintain and/or destroy documents and retaining such documentation, and modify the Document Retention Schedule from time to time as necessary to comply with law, local ordinances, and the MCB control regulations, and/or to include additional or revised document categories as may be appropriate to reflect Einstein Labs policies and procedures.

3. Suspension of Document Destruction; Compliance.

The operation becomes subject to a duty to preserve (or halt the destruction of) documents once litigation, an audit or a government investigation is reasonably anticipated. Therefore, if the Administrator becomes aware that litigation, a governmental audit or a government investigation has been instituted, or is reasonably anticipated or contemplated, the Administrator shall immediately order a halt to all document destruction. The Administrator may thereafter amend or rescind the order only after conferring with legal counsel.

See Attachment M for Continued Information

RECEIVED
AUG 03 2016
ALCOHOL MARIJUANA CONTROL OFFICE
STATE OF ALASKA

Alcohol and Marijuana Control Office
550 W 7th Avenue, Suite 1600
Anchorage, AK 99501
marijuana.licensing@alaska.gov
https://www.commerce.alaska.gov/web/amco
Phone: 907.269.0350

Alaska Marijuana Control Board

Form MJ-01: Marijuana Establishment Operating Plan

(Additional Space as Needed):

See Attachment M Preserving and Maintenance of Required Records Continued:

4. Electronic Documents; Document Integrity. Documents in electronic format shall be maintained just as hard copy or paper documents are, in accordance with the Document Retention Schedule.

5. Privacy. It shall be the responsibility of the Administrator, after consultation with counsel, to determine how privacy laws will apply to the operation's documents from and with respect to employees and other constituencies; to establish reasonable procedures for compliance with such privacy laws; and to allow for their audit and review on a regular basis. In any event, such Privacy policies shall not interfere with the MCB 3 AAC 306.755 requirements to make Einstein Labs business records available to the MCB Director and enforcement officers

6. Emergency Planning. Documents shall be stored in a safe and accessible manner. All business records for the past six (6) months shall be kept on the licensed premise of the operation, pursuant to 3 AAC 306.755. Documents that are necessary for the continued operation of the lab in the case of an emergency shall be regularly duplicated or backed up and maintained in an off-site location.

7. Document Creation and Generation. With respect to each employee or lab function, the Administrator shall attempt to determine whether documents are created which can be easily segregated from others, so that, when it comes time to destroy (or retain) those documents, they can be easily culled from the others for disposition.

8. Document Retention Schedule. [*As required by 3 AAC 306.755 – all business records that are six (6) months or newer must be maintained and kept in safe and secured location at Einstein Labs premises.] and available to the MCB within three (3) business days of request.

Document Type	Retention Period
3 AAC 306.755 Specific Documents	
Complete list of all Employee Information	10 yrs after employment ends
Contact information for security vendors	Permanent
Advertisement and marketing records	7 years

RECEIVED
AUG 03 2016
ALCOHOL MARIJUANA CONTROL OFFICE
STATE OF ALASKA

Alcohol and Marijuana Control Office
550 W 7th Avenue, Suite 1600
Anchorage, AK 99501
marijuana.licensing@alaska.gov
https://www.commerce.alaska.gov/web/amco
Phone: 907.269.0350

Alaska Marijuana Control Board

Form MJ-01: Marijuana Establishment Operating Plan

(Additional Space as Needed):

See Attachment M Preserving and Maintenance of Required Records Continued (2):

Current diagram of the licensed premises including each restricted access area	Continuously updated
Visitor Log (includes name, date, time entry, And restricted area accessed)	Permanent
Transportation records	Permanent
Inventory Tracking Activity	Permanent
Disposal and Waste Activity	Permanent
Accounting and Finance	
Accounts Payable & Receivable	7 years
Annual Financial Statements and Audit Reports	Permanent
Bank Statements, Reconciliations, Deposit Slips	7 years
Canceled Checks	7 years
Credit Card Receipts	3 years
Employee/Business Expense Reports/Documents	7 years
General Ledger	Permanent
Interim Financial Statements	7 years
Contributions/Gifts/Grants	
Contribution Records	Permanent
Documents Evidencing Terms of Gifts	Permanent
Grant Records	7 yrs after end of grant period
Corporate and Exemption	
Articles of Incorporation and Amendments	Permanent
Operating Agreement and Amendments	Permanent
Minute Books, including Board & Committee Minutes	Permanent

RECEIVED
AUG 03 2016
ALCOHOL MARIJUANA CONTROL OFFICE
STATE OF ALASKA

Alcohol and Marijuana Control Office
550 W 7th Avenue, Suite 1600
Anchorage, AK 99501
marijuana.licensing@alaska.gov
https://www.commerce.alaska.gov/web/amco
Phone: 907.269.0350

Alaska Marijuana Control Board

Form MJ-01: Marijuana Establishment Operating Plan

(Additional Space as Needed):

See Attachment M Preserving and Maintenance of Required Records Continued (3):

Annual Reports to Attorney General & Secretary of State	Permanent
Other Corporate Filings	Permanent
IRS Exemption Application (Form 1023 or 1024)	Permanent
IRS Exemption Determination Letter	Permanent
State Exemption Application (if applicable)	Permanent
State Exemption Determination Letter (if applicable)	Permanent
Licenses and Permits	Permanent
Employer Identification (EIN) Designation	Permanent

Correspondence and Internal Memoranda

Hard copy correspondence and internal memoranda relating to a particular document otherwise addressed in this Schedule should be retained for the same period as the document to which they relate.

Hard copy correspondence and internal memoranda relating to routine & significant matters	Two years to Permanent

Electronic Mail (E-mail) to or from the Lab

Electronic mail (e-mails) relating to a particular document otherwise addressed in this Schedule should be retained for the same period as the document to which they relate, but may be retained in hard copy form with the document to which they relate.

E-mails considered important with lasting significance	Permanent, subject to review
E-mails, routine	12 months

Electronically Stored Documents

Electronically stored documents comprising or relating to a particular document otherwise addressed in this Schedule should be retained for the same period as the document which they comprise or to which they relate, but may be retained in hard copy form (unless the electronic aspect is of significance).

RECEIVED
AUG 03 2016
ALCOHOL MARIJUANA CONTROL OFFICE
STATE OF ALASKA

Alcohol and Marijuana Control Office
550 W 7th Avenue, Suite 1600
Anchorage, AK 99501
marijuana.licensing@alaska.gov
https://www.commerce.alaska.gov/web/amco
Phone: 907.269.0350

Alaska Marijuana Control Board

Form MJ-01: Marijuana Establishment Operating Plan

(Additional Space as Needed):

See Attachment M Preserving and Maintenance of Required Records Continued (4):

Employment, Personnel and Pension	
Personnel Records	10 yrs after employment ends
Complete list of all Employees	10 yrs after employment ends
Employee contracts	10 yrs after termination
Retirement and pension records	Permanent
Insurance	
Property, D&O, Workers' Compensation and General Liability Insurance Policies	Permanent
Insurance Claims Records	Permanent
Legal and Contracts	
Contracts, related correspondence and other supporting documentation	10 yrs after employment ends
Legal correspondence	Permanent
Management and Miscellaneous	
Strategic Plans	7 years after expiration
Disaster Recovery Plan	7 years after replacement
Policies and Procedures Manual	Current version w/ revision history
Property – Real, Personal and Intellectual	
Property deeds and purchase/sale agreements	Permanent
Property Tax & Property Leases	Permanent
Trademarks, Copyrights and Patents	Permanent
Tax	
Tax exemption documents & correspondance	Permanent
IRS Rulings, Tax Returns	Permanent
Annual information returns – federal & state	Permanent

RECEIVED
AUG 03 2016
ALCOHOL MARIJUANA CONTROL OFFICE
STATE OF ALASKA

Alcohol and Marijuana Control Office
550 W 7th Avenue, Suite 1600
Anchorage, AK 99501
marijuana.licensing@alaska.gov
https://www.commerce.alaska.gov/web/amco
Phone: 907.269.0350

Alaska Marijuana Control Board

Form MJ-01: Marijuana Establishment Operating Plan

Section 3 – Inventory Tracking of All Marijuana and Marijuana Product

Review the requirements under 3 AAC 306.730, and identify how the proposed establishment will meet the listed requirements.

All licensed marijuana establishments must use a marijuana inventory tracking system capable of sharing information with the system the board implements to ensure all marijuana cultivated and sold in the state, and each marijuana product processed and sold in the state, is identified and tracked from the time the marijuana propagated from seed or cutting, through transfer to another licensed marijuana establishment, or use in manufacturing a product, to a completed sale of marijuana or marijuana product, or disposal of the harvest batch of marijuana or production lot of marijuana product.

Applicants should be able to answer "Yes" to all items below.

Marijuana Tracking and Weighing:	Yes	No
A marijuana inventory tracking system, capable of sharing information with the system the board implements to ensure tracking for the reasons listed above, will be used	■	☐
All marijuana delivered to a marijuana establishment will be weighed on a scale certified in compliance with 3 AAC 306.745	■	☐

Describe the marijuana tracking system that you plan to use and how you will ensure that it is capable of sharing information with the system the board implements:

Einstein Labs will utilize the state compliant and approved Marijuana Enforcement Tracking Reporting & Compliance (Metrc) electronic inventory tracking system pursuant to regulation 3 AAC 306.540. Metrc will be used to identify and track marijuana or marijuana product from the time the marijuana or marijuana product is received, through the use of the marijuana or marijuana product in manufacturing any other marijuana product, sale or transfer of the marijuana or marijuana product originally received, or any marijuana product manufactured at the marijuana product manufacturing facility to another licensed marijuana establishment and finally, disposal of any expired or outdated marijuana or marijuana product that is not sold or transferred to another licensed marijuana establishment.

Einstein Labs will also utilize Quickbooks (or comparable system) as a complimentary system that will be used to supplement Metrc as needed to complete the overall operations employee and product database.

See Attachment N for Continued Information

RECEIVED
AUG 03 2016
ALCOHOL MARIJUANA CONTROL OFFICE
STATE OF ALASKA

Alcohol and Marijuana Control Office
550 W 7th Avenue, Suite 1600
Anchorage, AK 99501
marijuana.licensing@alaska.gov
https://www.commerce.alaska.gov/web/amco
Phone: 907.269.0350

Alaska Marijuana Control Board

Form MJ-01: Marijuana Establishment Operating Plan

(Additional Space as Needed):

Attachment N Marijuana Tracking System Continued:

Einstein Labs may also utilize Bio-Track THC (or comparable system) as a complimentary system that will be used as a point of sale and inventory management tool.

System & Products

• Metrc Application & Software
* BioTrack THC Software & API (or comparable, optional)
• One (1) Portable processing & kitchen laptop (main desktop and server located in office)
• One (1) RFID Barcode Scanner (or comparable)
• Plant Tags & strap attachments
• One (1) Zebra 2824 Thermal Transfer Printer (or comparable) & Labels
• A&D Legal Trade Large Scale (or comparable per requirements, 3 AAC 306.745)
• A&D FX 1200iN Integrated Scale (or comparable per requirements, 3AAC 306.745)

The designated licensee (CEO) will be responsible for ensuring that the overall system is adequately maintained and maintains sharing ability with all systems in order to meet state and local requirements. Employees will be trained in the operation of Metrc and supplemental systems during their orientation period to ensure they are providing accurate information when working within Metrc and therefore can recognize if there becomes a system interface problem. All employees are required to enter information into the tracking system while completing their daily operations and changes will not be considered complete until updated in the electronic inventory tracking system.

If any supplemental systems are required to feed information into Metrc, as deemed appropriate by the Marijuana Control Board, and are not able too, authorized personnel and employees will manually add in the information so that sharing with the states system remains intact as outlined in 3 AAC 306.730.

Information shared with Metrc will consist of:

* Product lists (type, amount, weight & etc.)
* Receiving & Transferring of Marijuana
* Manufacturing Processes
* Vender Information
* Transportation Vehicle Information

RECEIVED
AUG 03 2016
ALCOHOL MARIJUANA CONTROL OFFICE
STATE OF ALASKA

Alcohol and Marijuana Control Office
550 W 7th Avenue, Suite 1600
Anchorage, AK 99501
marijuana.licensing@alaska.gov
https://www.commerce.alaska.gov/web/amco
Phone: 907.269.0350

Alaska Marijuana Control Board

Form MJ-01: Marijuana Establishment Operating Plan

Section 4 – Employee Qualification and Training

Review the requirements under 3 AAC 306.700, and identify how the proposed establishment will meet the listed requirements.

A marijuana establishment and each licensee, employee, or agent of the marijuana establishment who sells, cultivates, manufactures, tests, or transports marijuana or a marijuana product, or who checks the identification of a consumer or visitor, shall obtain a marijuana handler permit from the board before being licensed or beginning employment at a marijuana establishment.

Applicants should be able to answer "Yes" to all items below.

Marijuana Hander Permit:	Yes	No
Each licensee, employee, or agent of the marijuana establishment who sells, cultivates, manufactures, tests, or transports marijuana or marijuana product, or who checks the identification of a consumer or visitor, shall obtain a marijuana handler permit from the board before being licensed or beginning employment at the marijuana establishment	■	☐
Each licensee, employee, or agent who is required to have a marijuana handler permit shall keep that person's marijuana handler permit card in that person's immediate possession (or a valid copy on file on the premises of a retail marijuana store, marijuana cultivation facility, or marijuana product manufacturing facility) when on the licensed premises	■	☐
Each licensee, employee, or agent who is required to have a marijuana handler permit shall ensure that that person's marijuana handler permit card is valid and has not expired	■	☐

Describe how your establishment will meet the requirements for employee qualifications and training:

All employees will be 21 years and older and are required to have a marijuana handlers card as outlined in 3 AAC 306.425 & 3 AAC 306.700, food worker card and meet all pre-employment requirements before the start of employment. Employees will fulfill their duties as stated in their job description throughout their tenure. Employees will meet all applicable laws for being employed in the U.S. and all applicable employee taxes and procedures. Einstein Labs will follow all labor laws and strive for a safe and secure working environment.

See Attachment O for Continued Information

RECEIVED
AUG 03 2016
ALCOHOL MARIJUANA CONTROL OFFICE
STATE OF ALASKA

Alcohol and Marijuana Control Office
550 W 7th Avenue, Suite 1600
Anchorage, AK 99501
marijuana.licensing@alaska.gov
https://www.commerce.alaska.gov/web/amco
Phone: 907.269.0350

Alaska Marijuana Control Board

Form MJ-01: Marijuana Establishment Operating Plan

(Additional Space as Needed):

Attachment O Employee Qualifications and Training Continued:

Pre-employment requirements for all employees include:

1. Possession of ability to obtain a marijuana handler permit & food handler card prior to beginning work at the product manufacturing facility;
2. Over the age of 21 years & valid government issued identification;
3. Completed Employment Application;
4. Two (2) good standing professional references and one (1) personal reference;
5. Prior manufacturing or food service knowledge;
6. Prior education;
7. Computer skills;
8. Organizational skills;
9. People skills;
10. Work ethic;
11. How they appear to handle pressured situations; and
12. Any other quality or skill deemed necessary for their position at the time.

Each employee will have a marijuana handlers permit and food handler card before the beginning of their first work shift. Each employee will participate in a ninety (90) day probationary period in order to ascertain goodness of fit in the position. The probationary period will consists of a hands-on training period where employees will complete applicable trainings and work closely with a manager in order to ensure proficiency in job duties. If the employee does not meet set standards within ninety (90) days, management can chose to extend the probationary period or terminate employment.

Each employee will be made aware of the risks associated with employment at a marijuana establishment as well as will be trained in the operation of Metrc (state approved inventory tracking system) & Bio-Track (as necessary) during the orientation period, including on-site supervision by a manager until proficient. Management will undergo an extensive training provided by Metrc and the designated licensee will be responsible for the overall management of the system.

RECEIVED
AUG 03 2016
ALCOHOL MARIJUANA CONTROL OFFICE
STATE OF ALASKA

Alcohol and Marijuana Control Office
550 W 7th Avenue, Suite 1600
Anchorage, AK 99501
marijuana.licensing@alaska.gov
https://www.commerce.alaska.gov/web/amco
Phone: 907.269.0350

Alaska Marijuana Control Board

Form MJ-01: Marijuana Establishment Operating Plan

(Additional Space as Needed):

Attachment O Employee Qualifications and Training Continued (2):

Items to be included in orientation training for all new employees are listed below and ensure employees understand safety and company compliance:

Einstein Labs mission and values

Emergency Evacuation Plan- plan and procedure for evacuation emergencies. Procedures include; Evacuation routes, procedures to account for employees, conditions under which evacuation may be necessary, shelter in place conditions, and employee & employer responsibilities.

Workplace Safety for Employees- employees will understand why safety is important, know what the safety policy requires and how to take a role in workplace safety.

Introduction to OSHA- employees will be able to understand the purpose of OSHA, OSHA's strategies for improving workplace safety, recognize the General Duty Clause and knowing their rights and responsibilities.

Emergency Action & Fire Prevention- employees will learn to understand workplace hazards, how to respond including evacuation and how to prevent fires.

Hazard Communication- employees will learn how to recognize hazardous chemicals, understand the risk they pose, interpret the information on chemical labels, understand safety data sheets, protect themselves from physical & health hazards and response to emergencies.

Orientation- including pay periods, important P&P's, Cole Memorandum, shift information, safety procedures, Franwell Metrc inventory tracking system, marijuana diversion and more.

Contacted, temporary service employees will be provided a basic training on premises safety, emergency evacuation place, Cole Memorandum and product diversion policies.

Chief Executive Officer (CEO)- Violence in the Workplace, Sexual Harassment in the Workplace, Effective Communication, Advanced orientation (HR, finance, roles & responsibilities, taxes, operations manual, safety procedures & etc.), Workers Compensation, Leadership Skills and effective operation of a marijuana establishment under the Cole Memorandum guidelines.

RECEIVED
AUG 03 2016
ALCOHOL MARIJUANA CONTROL OFFICE
STATE OF ALASKA

Alcohol and Marijuana Control Office
550 W 7th Avenue, Suite 1600
Anchorage, AK 99501
marijuana.licensing@alaska.gov
https://www.commerce.alaska.gov/web/amco
Phone: 907.269.0350

Alaska Marijuana Control Board

Form MJ-01: Marijuana Establishment Operating Plan

(Additional Space as Needed):

Attachment O Employee Qualifications and Training Continued (3):

Executive Manager- Violence in the Workplace, Sexual Harassment in the Workplace, Effective Communication, Advanced Orientation (HR, finance, roles & responsibilities, taxes, operations manual, safety procedures & etc.) Workers Compensation, Leadership Skills, law enforcement cooperation and effective operation or a marijuana establishment under the Cole Memorandum guidelines. Manufacturing orientation (extraction and edible handling & processing/cooking techniques, climate control quarantine and storage, OSHA, DEC and food safety standards, weight and packaging, waste disposal, and more).

Manufacturing Manager- Violence in the Workplace, Sexual Harassment in the Workplace, Effective Communication, Advanced Orientation (HR, finance, roles & responsibilities, taxes, operations manual, safety procedures, setting up deliveries and more), Workers Compensation, Leadership Skills, law enforcement cooperation and effective operation or a marijuana establishment under the Cole Memorandum guidelines. HAZMAT and Havloc and Associate accredited training or similar (2 day intensive extraction course). Manufacturing orientation (extraction and edible handling & processing/cooking techniques, climate control quarantine and storage, OSHA, DEC and food safety standards, weight and packaging, waste disposal, and more).

Manufacturing Specialist- Onsite or online training provided by the Manufacturing Manager in the following areas; Violence in the Workplace, Sexual Harassment in the Workplace, hands-on extraction/chemistry trainings related to extraction methods and processes, regulations and cooperation with law enforcement. Manufacturing orientation (extraction and edible handling & processing/cooking techniques, climate control quarantine and storage, OSHA, DEC and food safety standards, weight and packaging, waste disposal, and more).

Edible Chef- Onsite or online training provided by the Manufacturing Manager in the following areas; Violence in the Workplace, Sexual Harassment in the Workplace, hands-on extraction/chemistry trainings related to extraction methods and processes, operations of kitchen equipment and recipes, regulations and cooperation with law enforcement. Manufacturing orientation (extraction and edible handling & processing/cooking techniques, climate control quarantine and storage, OSHA, DEC and food safety standards, weight and packaging, waste disposal, and more).

RECEIVED
AUG 03 2016
ALCOHOL MARIJUANA CONTROL OFFICE
STATE OF ALASKA

Alcohol and Marijuana Control Office
550 W 7th Avenue, Suite 1600
Anchorage, AK 99501
marijuana.licensing@alaska.gov
https://www.commerce.alaska.gov/web/amco
Phone: 907.269.0350

(Additional Space as Needed):

Attachment O Employee Qualifications and Training Continued (4):

Employee Positions & Qualifications

Einstein Labs position descriptions and qualifications are listed below:

Position: Chief Executive Officer (CEO)

The CEO reports to the Shareholders and work collaboratively with the Board of Directors in leading the transformation of Einstein Labs marijuana cultivation facility into an organization capable of delivering on its long term vision. The CEO will collaborate with the Shareholders and Board of Directors to refine and implement the strategic plan while ensuring that the budget, staff and priorities are aligned with EL's core mission. The CEO is responsible for overall operations and accountability to shareholders and the general public including:

- Oversee management position(s) within the organization
- Meet with the Board of Directors and other executives to determine if the company is in accordance with goals and policies
- Provide visionary and strategic leadership to the organization
- Collaborate with the Board or Directors & senior management team to develop policies & procedures
- Maintain an awareness of the overall operations and financial goals & budgets
- Encourage business investment
- Promote and encourage economic development within the community
- Participate in the hire, training and termination of employees as needed
- Develop & implement strategies and set the overall direction of the company or organization
- Understand and guide the investment of funds and manage associated risks, supervise case management activities and execute capital-raising strategies to support expansion

RECEIVED
AUG 03 2016
ALCOHOL MARIJUANA CONTROL OFFICE
STATE OF ALASKA

Alcohol and Marijuana Control Office
550 W 7th Avenue, Suite 1600
Anchorage, AK 99501
marijuana.licensing@alaska.gov
https://www.commerce.alaska.gov/web/amco
Phone: 907.269.0350

Alaska Marijuana Control Board

Form MJ-01: Marijuana Establishment Operating Plan

(Additional Space as Needed):

Attachment O Employee Qualifications and Training Continued (5):

- Ensure that the Board of Directors have timely information necessary to perform their fiduciary duties and other governance responsibilities
- Develop and maintain positive working relationships with community associations, industry and government officials
- Direct staff, including organizational structure, professional development, motivation, performance evaluation, discipline, compensation, personnel policies and procedures as needed
- Provide other duties as assigned by the Shareholder(s) or Board of Directors

Education & Experience

Individual must possess a BA/BS in a business related field with five (5) years experience in senior business management or ten (10) years combined experience owning or supervising a commercial business

Must have a marijuana handlers permit prior to employment

Must have a food handlers card prior to employment

Skills
Marijuana establishment senior management experience preferred

Strong leader with the ability to set clear priorities, delegate, and guide investment in people and systems; keen analytic, organization and problem solving skills which support and enable sound decision making

Strong commitment to the professional development of staff; successful track record of recruiting and retaining a diverse team

Good communication and networking skills and ability to interact with other people from the industry and community

RECEIVED
AUG 03 2016
ALCOHOL & MARIJUANA CONTROL OFFICE
STATE OF ALASKA

Alcohol and Marijuana Control Office
550 W 7th Avenue, Suite 1600
Anchorage, AK 99501
marijuana.licensing@alaska.gov
https://www.commerce.alaska.gov/web/amco
Phone: 907.269.0350

Alaska Marijuana Control Board

Form MJ-01: Marijuana Establishment Operating Plan

(Additional Space as Needed):

Attachment O Employee Qualifications and Training Continued (6):

Extensive knowledge of manufacturing operations and overall marijuana industry

Extensive knowledge of state and local OSHA, Class 1 Div 1 & Class 1 Div 2 requirements and applicable fire and safety codes

Extensive knowledge of the Cole Memorandum, Alaska state & municipal regulation and Planning and Zoning requirements of a marijuana establishment

Position: Executive Manager

The Executive Manager reports to the CEO and works collaboratively with the Manufacturing Manager in overseeing the day to day operations of Einstein Labs marijuana product manufacturing facility. The Executive Manager directly oversees human resources, finance, record keeping and administrative related activities. The Executive Manager will ensure deliveries, AR/AP, inventory tracking and all P&P's are followed throughout the operation.

Responsibilities include:

- Oversees Office Assistants and overall administrative functions within the organization
- Collaborate with senior management and the Board of Directors to develop policies & procedures and develop strategic goals
- Oversee day to day operations including; employee & vender relations, accounts payable/accounts receivable, setting up deliveries, auditing records & operational systems and employee scheduling
- Oversee completing and submitting tax returns, quarterly & annual reports and renewing licenses
- Handle cash transactions
- Provide orientation and supplemental training to employees as applicable

RECEIVED
AUG 03 2016
ALCOHOL MARIJUANA CONTROL OFFICE
STATE OF ALASKA

Alcohol and Marijuana Control Office
550 W 7th Avenue, Suite 1600
Anchorage, AK 99501
marijuana.licensing@alaska.gov
https://www.commerce.alaska.gov/web/amco
Phone: 907.269.0350

Alaska Marijuana Control Board

Form MJ-01: Marijuana Establishment Operating Plan

(Additional Space as Needed):

Attachment O Employee Qualifications and Training Continued (7):

- Delivery and transport of marijuana product as necessary
- Assist government regulators and auditors with inspections and audits of the facility operations, inventory, sales and regulatory compliance
- Help to ensure that safety & security measures are maintained
- Participate in community events in order to promote community awareness and collaboration with the company
- Provide back up to the Manufacturing Manager as needed
- Stand for long periods of time or lift over 25 lbs. repeatedly as needed
- Other duties as assigned

Education & Experience

Individual must possess a BS/BA in a business related field with three (3) years senior management experience or a BS/BA or advanced degree in a non-related field with five (5) years senior management experience

Must have a marijuana handlers permit prior to employment

Must have a food handlers card prior to employment

Skills

Marijuana establishment senior management experience preferred.

Strong leader with the ability to set clear priorities, delegate, and guide investment in people and systems; keen analytic, organization and problem solving skills which support and enable sound decision making.

RECEIVED
AUG 03 2016
ALCOHOL MARIJUANA CONTROL OFFICE
STATE OF ALASKA

Alcohol and Marijuana Control Office
550 W 7th Avenue, Suite 1600
Anchorage, AK 99501
marijuana.licensing@alaska.gov
https://www.commerce.alaska.gov/web/amco
Phone: 907.269.0350

Alaska Marijuana Control Board

Form MJ-01: Marijuana Establishment Operating Plan

(Additional Space as Needed):

Attachment O Employee Qualifications and Training Continued (7):

Strong commitment to the professional development of staff; successful track record of recruiting and retaining a diverse team.

Good communication and networking skills and ability to interact with other people from the industry and community.

Extensive knowledge of administrative operations and overall marijuana industry.

Knowledge of the Cole Memorandum, Alaska state & municipal regulations, marijuana establishment operations and overall marijuana industry.

Position: Manufacturing Manager

The Manufacturing Manager reports to the CEO and works collaboratively with the Executive Manager in overseeing the day to day operations of Einstein Labs marijuana product manufacturing facility. The Manufacturing Manager is responsible for managing the commercial marijuana manufacturing processes of the company including but not limited too; overseeing the entire extraction processes, maintaining quality control, ensuring proper packaging and labeling, production of edibles and ensuring certifications and training is maintained. The Manufacturing Manager oversees overall manufacture standards as outlined by federal, state and community requirements. Responsibilities include:

- Oversees Manufacturing Specialists and overall extraction and production operational functions within the organization
- Collaborate with senior management and the Board of Directors to develop policies & procedures and develop strategic goals
- Oversee day to day operations including propagation to sale, inventory tracking system, safety & security in restricted areas, data collection & in-house testing, develop & maintaining safety protocols and more

RECEIVED
AUG 03 2016
ALCOHOL MARIJUANA CONTROL OFFICE
STATE OF ALASKA

Alcohol and Marijuana Control Office
550 W 7th Avenue, Suite 1600
Anchorage, AK 99501
marijuana.licensing@alaska.gov
https://www.commerce.alaska.gov/web/amco
Phone: 907.269.0350

Alaska Marijuana Control Board

Form MJ-01: Marijuana Establishment Operating Plan

(Additional Space as Needed):

Attachment O Employee Qualifications and Training Continued (8):

- Performing in-process and post-process quality assurance testing as necessary and conducting visual inspections to ensure all product meets or exceed specifications and expectations. Such quality assurance work shall include but not be limited to:
- Proper weighing, data recording, and batch tracking throughout processes
- Work with 3rd party laboratories on sampling and lot control for their sample gathering and reporting.
- Adhere to Standard Operating Procedures (SOP)
- Handle cash transactions
- Provide orientation and supplemental training to employees as applicable
- Ensure package and labeling meets regulatory requirements
- Delivery and transport of marijuana product
- Ability to identify and assess product coming into the facility
- Assist government regulators and auditors with inspections and audits of the facility operations, inventory, sales and regulatory compliance
- Help to ensure that safety & security measures are maintained
- Participate in community events in order to promote community awareness and collaboration with the company
- Provide back up to the Executive Manager as needed
- Stand for long periods of time while engaging in manufacturing activities & lift 50 lbs. repeatedly as necessary
- Other duties as assigned

RECEIVED
AUG 03 2016
ALCOHOL MARIJUANA CONTROL OFFICE
STATE OF ALASKA

Alcohol and Marijuana Control Office
550 W 7th Avenue, Suite 1600
Anchorage, AK 99501
marijuana.licensing@alaska.gov
https://www.commerce.alaska.gov/web/amco
Phone: 907.269.0350

Alaska Marijuana Control Board

Form MJ-01: Marijuana Establishment Operating Plan

(Additional Space as Needed):

Attachment O Employee Qualifications and Training Continued (9):

Education & Experience

Individual must possess a BS/BA in a chemistry related field with three (3) years senior management experience or ten (10) years combined experience overseeing the operations of a commercial business including senior management experience

Must have a marijuana handlers permit prior to employment

Must have a food handlers card prior to employment

Skills
Marijuana establishment senior management experience preferred

Strong leader with the ability to set clear priorities, delegate, and guide investment in people and systems; keen analytic, organization and problem solving skills which support and enable sound decision making

Knowledge of techniques and equipment necessary to run a successful manufacturing operation

Good communication and networking skills and ability to interact with other people from the industry and community

Knowledgeable in extraction techniques & infused product development

Extensive knowledge of state and local OSHA, Class 1 Div 1 & Class 1 Div 2 requirements and applicable fire and safety codes

Extensive knowledge of the Cole Memorandum, Alaska state & municipal regulation, Planning and Zoning requirements of a marijuana establishment and overall marijuana industry.

RECEIVED
AUG 03 2016
ALCOHOL MARIJUANA CONTROL OFFICE
STATE OF ALASKA

Alcohol and Marijuana Control Office
550 W 7th Avenue, Suite 1600
Anchorage, AK 99501
marijuana.licensing@alaska.gov
https://www.commerce.alaska.gov/web/amco
Phone: 907.269.0350

Alaska Marijuana Control Board

Form MJ-01: Marijuana Establishment Operating Plan

(Additional Space as Needed):

Attachment O Employee Qualifications and Training Continued (10):

Position: Manufacturing Specialist

The Manufacturing Specialist reports to the Manufacturing Manager and works collaboratively with the Manufacturing Manager to complete the day to day operations of Einstein Labs marijuana product manufacturing facility. The Manufacturing Specialist will be responsible for safely and effectively creating cannabis oils, liquids to be ingested, inhaled, applied topically or made into edible creations. Responsibilities include:

- Performing his/her duties in a safe manner and environment while adhering to all governmental regulations for this industry.
- Carrying out all extraction, extract processing, product formulation, filling and manufacturing procedures in an efficient manner that also complies with state and local regulations, SOP's and all applicable laboratory procedures.
- Being cross-trained on and work along side the Chef to create edible creations as needed.
- Ensuring compliance and accuracy involving all product tracking, product security, and product movement procedures.
- Following appropriate control measures to prevent mixing of dissimilar production components while following Good Manufacturing Practices.
- Performing in-process and post-process quality assurance testing as necessary and conducting visual inspections to ensure all product meets or exceed specifications and expectations. Such quality assurance work shall include but not be limited to:
- Recording and monitoring process conditions to ensure compliance to standard operating procedures
- Proper weighing, data recording, and batch tracking throughout processes
- Work with 3rd party laboratories on sampling and lot control for their sample gathering and reporting.

RECEIVED
AUG 03 2016
ALCOHOL MARIJUANA CONTROL OFFICE
STATE OF ALASKA

Alcohol and Marijuana Control Office
550 W 7th Avenue, Suite 1600
Anchorage, AK 99501
marijuana.licensing@alaska.gov
https://www.commerce.alaska.gov/web/amco
Phone: 907.269.0350

Alaska Marijuana Control Board

Form MJ-01: Marijuana Establishment Operating Plan

(Additional Space as Needed):

Attachment O Employee Qualifications and Training Continued (11):

- Support new product and process development work with our Manufacturing Manager and Chef.
- Include standing, bending, and lifting up to 50 pounds, carrying product totes, pushing carts, moving and making adjustments to process equipment

Education & Experience

High School Diploma or G.E.D minimum and one (1) to three (3) years of applicable cannabis or related extraction, formulating, and packaging experience with a focus on ensuring product safety and customer safety

Must have a marijuana handlers permit prior to employment

Must have a food handlers card prior to employment

Skills
Knowledge of techniques and equipment necessary to run a successful manufacturing operation

Good communication and networking skills and ability to interact with other people from the industry and community
Knowledgeable in extraction techniques & infused product development

Attachment P Employee Qualifications and Training Continued (10):

Extensive knowledge of state and local OSHA, Class 1 Div 1 & Class 1 Div 2 requirements and applicable fire and safety codes

Knowledge of the Cole Memorandum, Alaska state & municipal regulations, marijuana establishment operations and overall marijuana industry.

RECEIVED
AUG 03 2016
ALCOHOL MARIJUANA CONTROL OFFICE
STATE OF ALASKA

Alcohol and Marijuana Control Office
550 W 7th Avenue, Suite 1600
Anchorage, AK 99501
marijuana.licensing@alaska.gov
https://www.commerce.alaska.gov/web/amco
Phone: 907.269.0350

Alaska Marijuana Control Board

Form MJ-01: Marijuana Establishment Operating Plan

(Additional Space as Needed):

Attachment O Employee Qualifications and Training Continued (12):

Position: Edible Chef

The Edible Chef reports to the Manufacturing Manager and works collaboratively with the Manufacturing Manager and Manufacturing Specialists to complete the day to day operations of Einstein Labs marijuana product manufacturing facility edible kitchen. The Edible Chef will be responsible for safely and effectively creating marijuana infused edible creations while ensuring all state and local food safety requirements, state serving size standards and standard operating procedures are maintained. The Edible Chef will focus on developing new edible products in all stages of concept to commercialization. Responsibilities include:

- Assist in the developing and manufacturing of new products, and exploring alternative manufacturing methods
- Developing recipes and prototypes to drive new edible concepts forward
- Conducting analysis of final product to ensure quality and compliance
- Overseeing the quality control and consistency of new edible products to ensure regulatory compliance
- Advising the executive committee on the viability of potential edible related initiatives
- Assist the Manufacturing Manager in completing the overall kitchen operations
- Ensuring that food manufacturing processes conform with government, processing, consumer and industry standards
- Having a strong working knowledge of ingredient functionality, microbiology, and food manufacturing processes

Education & Experience

A.A. in a culinary, food science or chemistry degree preferred or five (5) years experience in food or cannabis services with extensive kitchen experience

RECEIVED
AUG 03 2016
ALCOHOL & MARIJUANA CONTROL OFFICE
STATE OF ALASKA

Alcohol and Marijuana Control Office
550 W 7th Avenue, Suite 1600
Anchorage, AK 99501
marijuana.licensing@alaska.gov
https://www.commerce.alaska.gov/web/amco
Phone: 907.269.0350

Alaska Marijuana Control Board

Form MJ-01: Marijuana Establishment Operating Plan

(Additional Space as Needed):

Attachment O Employee Qualifications and Training Continued (13):

Must have a marijuana handlers permit prior to employment

Must have a food handlers card prior to employment

Skills

Knowledge of a range of sciences and their applications to food

Experience in the cannabis industry is preferred, but not required

Knowledge related to local and state Department of Environmental Conservation standards

Knowledge of the Cole Memorandum, Alaska state & municipal regulations, marijuana establishment operations and overall marijuana industry.

RECEIVED
AUG 03 2016
ALCOHOL MARIJUANA CONTROL OFFICE
STATE OF ALASKA

Alcohol and Marijuana Control Office
550 W 7th Avenue, Suite 1600
Anchorage, AK 99501
marijuana.licensing@alaska.gov
https://www.commerce.alaska.gov/web/amco
Phone: 907.269.0350

Alaska Marijuana Control Board

Form MJ-01: Marijuana Establishment Operating Plan

Section 5 – Waste Disposal

Review the requirements under 3 AAC 306.740, and identify how the proposed establishment will meet the listed requirements.

Applicants should be able to answer "Yes" to the statement below.

Marijuana Waste Disposal:	Yes	No
The marijuana establishment shall give the board at least 3 days notice in the marijuana inventory tracking system required under 3 AAC 306.730 before making the waste unusable and disposing of it	■	☐

Describe how you will store, manage, and dispose of any solid or liquid waste, including wastewater generated during marijuana cultivation, production, process, testing, or retail sales, in compliance with applicable federal, state, and local laws and regulations:

Einstein Labs will store, manage and dispose of any solid or liquid waste, including wastewater and other waste determined by the Board in compliance with applicable federal, state and local laws and regulations as outlined in 3 AAC 306.740(a). Einstein Labs will ensure that health and safety standards and DEC standards regarding food safety are met during the waste disposal process by ensuring that personal protective equipment (PPE) is used and reasonable precautions are taken while storing, managing and disposing of solid or liquid waste.

See Attachment Q for Continued Information

Describe what material or materials you will mix with the ground marijuana waste to make it unusable:

Non-compostable Material:

Paper Product
Cardboard Waste
Plastic Waste

RECEIVED
AUG 03 2016
ALCOHOL MARIJUANA CONTROL OFFICE
STATE OF ALASKA

Alcohol and Marijuana Control Office
550 W 7th Avenue, Suite 1600
Anchorage, AK 99501
marijuana.licensing@alaska.gov
https://www.commerce.alaska.gov/web/amco
Phone: 907.269.0350

Alaska Marijuana Control Board

Form MJ-01: Marijuana Establishment Operating Plan

(Additional Space as Needed):

Attachment Q Storage, Management, & Disposal of Waste Continued:

Employees are required to follow health standards as outlined in 3 AAC 306.735 including; maintaining a clean working environment, maintaining personal hygiene, avoiding contaminating areas, and ensuring waste disposal equipment is adequately maintained.

We anticipate having the following waste by-products from our manufacturing activities:

1. Waste from spent (processed with solvent) marijuana flowers, trim, and solid plant material;
2. Gloves, wipes, paper towels and other items used during processing that come into contact with marijuana;
3. Marijuana product that fails to meet quality testing;
4. Expired or outdated marijuana or marijuana product; and
5. Marijuana plant waste, including roots, stalks, leaves, and stems.

Solid Marijuana Waste (Not Processed)

The product manufacturing facility anticipates little solid marijuana waste due to most waste being processed with solvent, small amounts being used for testing, ensuring processes are streamlined to avoid unnecessary waste and ensuring products are sold before they are expired or outdated. A waste bin will be located in a designated area in the kitchen/refinement/packaging room in order to be used throughout the workday for solid waste (plant matter, expired or outdated marijuana product including edibles and topicals, & items used during the process (See 2.)). The bin will be labeled as "Solid Marijuana Waste" and will be secured with a latched lid that will ensure proper storage and sanitation. The bin will use a red theme with red liners, bags and markings to show a clear association with the waste disposal process. Sample bin(s) below:

20-55 Gallon Red Rubbermaid Brute Bin w/ Lid, Red Heavy Duty Waste Liner (or comparable)

RECEIVED
AUG 03 2016
ALCOHOL MARIJUANA CONTROL OFFICE
STATE OF ALASKA

Alcohol and Marijuana Control Office
550 W 7th Avenue, Suite 1600
Anchorage, AK 99501
marijuana.licensing@alaska.gov
https://www.commerce.alaska.gov/web/amco
Phone: 907.269.0350

Alaska Marijuana Control Board

Form MJ-01: Marijuana Establishment Operating Plan

(Additional Space as Needed):

Attachment Q Storage, Management, & Disposal of Waste Continued (2):

Once the bin is full it will be latched and replaced with an empty bin, the bin of solid waste will be weighed using a commercial scale as outlined below and in compliance with 3 AAC 306.745 and logged into the electronic inventory tracking system which will provide the required three (3) day notice to the Board in preparation for rendering it unusable and disposing of it (3 AAC 306.745(b)(1)). Sample scale below:

DYMO Postal Scale 25 lb. capacity (or comparable)

RECEIVED
AUG 03 2016
ALCOHOL MARIJUANA CONTROL OFFICE
STATE OF ALASKA

After the required three (3) day waiting period and the Board has approved for disposal, waste material will be combined with a non-compostable product. Marijuana solid waste will be weighed on the commercial scale, ground up using a commercial grinder and mixed with at least an equal amount of one of the materials listed below.

Non-Compostable Material:

- Paper Product
- Cardboard Waste
- Plastic Waste

Once the marijuana is ground up and combined with a material listed above making it unusable, it will be placed in closed, red waste bags and removed promptly from the premises. Sample grinder below:

Alcohol and Marijuana Control Office
550 W 7th Avenue, Suite 1600
Anchorage, AK 99501
marijuana.licensing@alaska.gov
https://www.commerce.alaska.gov/web/amco
Phone: 907.269.0350

Alaska Marijuana Control Board

Form MJ-01: Marijuana Establishment Operating Plan

(Additional Space as Needed):

Attachment Q Storage, Management, & Disposal of Waste Continued (3):

LEM Manual Meat Mixer/Grinder w/ 25 lb. Hopper (or comparable)

RECEIVED
AUG 03 2016
ALCOHOL MARIJUANA CONTROL OFFICE
STATE OF ALASKA

Processed Plant Material

Marijuana plant material (including; leaves, flowers, trim, stems, roots, stalks and more) that has been processed with a solvent to create marijuana concentrate products will be placed in a red bin to indicate waste, titled "Processed Plant Material". A waste bin will be located in a designated area in the kitchen/refinement/packaging room in order to be used throughout the workday for processed waste and will be secured with a latched lid to ensure proper storage and sanitation. The 20-55 Gallon Red Rubbermaid Brute Bin w/ Lid, Red Heavy Duty Waste Liner (or comparable) will use a red theme with red liners, bags and markings to show a clear association with the waste disposal process. Processed plant material will be weighed and logged into the marijuana inventory tracking system as necessary to meet local and state regulations.

Once the bin is full it will be latched and replaced with an empty bin, the bin of processed plant waste will be weighed using a commercial scale (DYMO Postal Scale 25 lb. capacity (or comparable)) in compliance with 3 AAC 306.745 and logged into the electronic inventory tracking system which will provide the required three (3) day notice to the Board in preparation for disposing of it (3 AAC 306.745(b)(1)).

Alcohol and Marijuana Control Office
550 W 7th Avenue, Suite 1600
Anchorage, AK 99501
marijuana.licensing@alaska.gov
https://www.commerce.alaska.gov/web/amco
Phone: 907.269.0350

(Additional Space as Needed):

Attachment Q Storage, Management, & Disposal of Waste Continued (4):

Requirements For All Marijuana By-Product Waste

Unusable solid waste and processed plant material will be stored in a locked bin located in the kitchen/refinement/packaging room inside the Product Manufacturing Facility, and all locks will comply with the highest standards of the UL standards. The disposed marijuana will not be stored outside the Product Manufacturing Facility at any time. Waste will be transferred to a solid waste facility or transfer station or incinerator and a record of the final destination will be maintained as part of the business record (3 AAC 306.470(c)(2). Prior to being removed from the Product Manufacturing Facility, all marijuana waste will be inspected and the composition of the final disposal mixture will be recorded. Management will ensure that the final disposal mixture (for marijuana waste not processed) is composed of no more than fifty percent (50%) marijuana waste by volume.

In the case of a waste disposal emergency such as contamination, accidents or other comparable situations, the marijuana waste will be separated from all other waste and stored in a separate bins until a Marijuana Control Board staff and/or Director authorizes an immediate disposal as outlined in 3 AAC 306.740(c)(1). Procedures on waste disposal will be followed for the emergency disposal situation and sanitary measures will take place as applicable.

Testing samples and samples returned to the product manufacturing facility after required testing will be disposed of in the same manner as listed above or below.

All marijuana rendered unusable and disposed of will be tracked using the Metrc system, and upon rendering the marijuana waste or item unusable, the following information will be recorded in the Metrc system:

1. A description of and reason for the marijuana being disposed of, including, if applicable, the weight of the plant(s) or item(s);
2. The date of disposal;
3. Confirmation that the marijuana was rendered unusable before disposal;
4. The method of disposal; and
5. The name and permit number of the agent responsible for disposal

RECEIVED
AUG 03 2016
ALCOHOL MARIJUANA CONTROL OFFICE
STATE OF ALASKA

Alcohol and Marijuana Control Office
550 W 7th Avenue, Suite 1600
Anchorage, AK 99501
marijuana.licensing@alaska.gov
https://www.commerce.alaska.gov/web/amco
Phone: 907.269.0350

(Additional Space as Needed):

Attachment Q Storage, Management, & Disposal of Waste Continued (5):

Wastewater

Einstein Labs will utilize the following plan for wastewater disposal due to generating waste water when creating products, cleaning kitchenware after creating edibles as well as cleaning items used in making lotions, salves and tinctures. Record of disposal will be logged with the date of disposal and the name and MJ Handler number of the agent responsible for disposal.

1. Einstein Labs will provide a copy upon request of the MSDS sheets for all chemicals that will be used in the production of our products.
2. Einstein Labs will test our drain to determine if there are chemicals in the drain and water that could not be in compliance and conform to federal, state and local requirements.
3. Wastewater that can not be spent down the drain will be pumped and transferred into commercial grade 20-55 gallon drums with sealable lids using all safety and sanitation methods listed in the solid waste section above. Wastewater will then be transferred to a wastewater facility as necessary.

Expired or Outdated Concentrate Disposal & Reuse

Marijuana and marijuana product will be checked weekly (visually looking at it as well as checking the dates in the inventory tracking system) by an authorized employee to assess for expired or outdated product. If outdated or expired concentrate products are found it will be separated from unexpired/outdated product, weighed and updated in the inventory tracking system.

Marijuana concentrates that are found to be expired or outdated will either be disposed of as outlined in the solid waste disposal plan or will be re-processed using a distillation method to create RSO (Rick Simpson Oil). If the expired or outdated product is being processed into RSO, it will be logged into the inventory tracking system and then processed through a distillation process that will remove any contaminants and bring the concentrate back to a pure and clean cannabis oil. The oil will then be used to create RSO capsules (Einstein Labs product) that will be tested and sold as a new product. After the distillation process the product is as pure as the originally processed concentrate before becoming expired or outdated and will pass all testing requirements as outlined in 3 AAC 306.550.

RECEIVED
AUG 03 2016
ALCOHOL MARIJUANA CONTROL OFFICE
STATE OF ALASKA

Alcohol and Marijuana Control Office
550 W 7th Avenue, Suite 1600
Anchorage, AK 99501
marijuana.licensing@alaska.gov
https://www.commerce.alaska.gov/web/amco
Phone: 907.269.0350

Alaska Marijuana Control Board

Form MJ-01: Marijuana Establishment Operating Plan

(Additional Space as Needed):

Attachment Q Storage, Management, & Disposal of Waste Continued (6):

Overall waste disposal system management is the responsibility of the Manufacturing Manager and any faulty materials or breakdowns will be promptly attended too. Authorized employees participating in the operation and procedure of waste disposal will be trained on all procedures, understand state, federal and local laws and regulation pertaining to waste disposal and report any discrepancies in procedures to the Manufacturing Manager and CEO to ensure proper steps are taken including; a thorough investigation, cleanup efforts, re-training or other steps as required.

RECEIVED
AUG 03 2016
ALCOHOL MARIJUANA CONTROL OFFICE
STATE OF ALASKA

Alcohol and Marijuana Control Office
550 W 7th Avenue, Suite 1600
Anchorage, AK 99501
marijuana.licensing@alaska.gov
https://www.commerce.alaska.gov/web/amco
Phone: 907.269.0350

Alaska Marijuana Control Board

Form MJ-01: Marijuana Establishment Operating Plan

Marijuana waste must be rendered unusable for any purpose for which it was grown or produced before it leaves the marijuana establishment. Describe the process or processes that you will use to make the marijuana plant waste unusable:

Once a waste bin is full it will be weighed using a commercial scale as outlined below and in compliance with 3 AAC 306.745 and logged into the electronic inventory tracking system which will provide the required three (3) day notice to the Board in preparation for rendering it unusable and disposing of it (3 AAC 306.745(b)(1)). Sample scale below:

DYMO Postal Scale 25 lb. capacity (or comparable)

After the required three (3) day waiting period and the Board has approved for disposal, waste material will be combined with a compostable or non-compostable product. Marijuana solid waste will be weighed on the commerical scale, ground up using a commercial grinder and mixed with at least an equal amount of one of the materials listed below:

Non-Compostable Material:

- Paper Product
- Cardboard Waste
- Plastic Waste

Once the marijuana is ground up and combined with a material listed above making it unusable, it will be placed in closed, red waste bags and removed promptly from the premises. Sample grinder below:

LEM Manual Meat Mixer/Grinder w/ 25 lb. Hopper (or comparable)

See Attachment R for Continued Information

RECEIVED
AUG 03 2016
ALCOHOL MARIJUANA CONTROL OFFICE
STATE OF ALASKA

Alcohol and Marijuana Control Office
550 W 7th Avenue, Suite 1600
Anchorage, AK 99501
marijuana.licensing@alaska.gov
https://www.commerce.alaska.gov/web/amco
Phone: 907.269.0350

Alaska Marijuana Control Board

Form MJ-01: Marijuana Establishment Operating Plan

(Additional Space as Needed):

Attachment R Process for Rendering Waste Unusable Continued:

Unusable solid waste will be taken to a solid waste facility or transfer station or incinerator and a record of the final destination will be maintained as part of the business record (3 AAC 306.470(c)(2). Testing samples and samples returned to the product manufacturing facility after required testing will be disposed of in the same manner as listed above. Prior to being removed from the Product Manufacturing Facility, all marijuana waste will be inspected and the composition of the final disposal mixture will be recorded. Management will ensure that the final disposal mixture is composed of no more than fifty percent (50%) marijuana waste by volume.

Once rendered unusable, marijuana will be securely stored in a locked bin located in the kitchen area inside the Product Manufacturing Facility, and all locks will comply with the highest standards of the UL standards. The disposed marijuana will not be stored outside the Product Manufacturing Facility at any time.

Ownership and Management will give at least three (3) days notice to the MC Board before disposing of any marijuana waste by logging the affected products in the marijuana inventory tracking system, Metrc. Records of all disposal information and waste collection will be maintained by Management, securely stored at the Product Manufacturing Facility, and made available to the MC Board upon request. All marijuana rendered unusable and disposed of will be recorded in the Metrc system with the following information:

1. A description of and reason for the marijuana being disposed of;
2. The date of disposal;
3. Confirmation that the marijuana was rendered unusable before disposal;
4. The method of disposal; and
5. The name and permit number of the agent responsible for disposal.

RECEIVED
AUG 03 2016
ALCOHOL MARIJUANA CONTROL OFFICE
STATE OF ALASKA

Alcohol and Marijuana Control Office
550 W 7th Avenue, Suite 1600
Anchorage, AK 99501
marijuana.licensing@alaska.gov
https://www.commerce.alaska.gov/web/amco
Phone: 907.269.0350

Alaska Marijuana Control Board

Form MJ-01: Marijuana Establishment Operating Plan

(Additional Space as Needed):

Attachment R Process for Rendering Waste Unusable Continued (2):

In the case of a waste disposal emergency such as contamination, accidents or other comparable situations, the solid waste will be separated from all other waste and stored in a separate bins until a Marijuana Control Board staff and/or Director authorizes an immediate disposal as outlined in 3 AAC 306.740(c)(1). Procedures on waste disposal will be followed for the emergency disposal situation and sanitary measures will take place as applicable.

RECEIVED
AUG 03 2016
ALCOHOL MARIJUANA CONTROL OFFICE
STATE OF ALASKA

Alcohol and Marijuana Control Office
550 W 7th Avenue, Suite 1600
Anchorage, AK 99501
marijuana.licensing@alaska.gov
https://www.commerce.alaska.gov/web/amco
Phone: 907.269.0350

Alaska Marijuana Control Board

Form MJ-01: Marijuana Establishment Operating Plan

Section 6 – Transportation and Delivery of Marijuana and Marijuana Products

Review the requirements under 3 AAC 306.750, and identify how the proposed establishment will meet the listed requirements.

Applicants should be able to answer "Yes" to all items below.

Marijuana Transportation:	Yes	No
The marijuana establishment from which a shipment of marijuana or marijuana product originates will ensure that any individual transporting marijuana shall have a marijuana handler permit required under 3 AAC 306.700	■	☐
The marijuana establishment that originates the transport of any marijuana or marijuana product will use the marijuana inventory tracking system to record the type, amount, and weight of marijuana or marijuana product being transported, the name of the transporter, the time of departure and expected delivery, and the make, model, and license plate number of the transporting vehicle	■	☐
The marijuana establishment that originates the transport of any marijuana or marijuana product will ensure that a complete printed transport manifest on a form prescribed by the board must be kept with the marijuana or marijuana product at all times during transport	■	☐
During transport, any marijuana or marijuana product will be in a sealed package or container in a locked, safe, and secure storage compartment in the vehicle transporting the marijuana or marijuana product, and the sealed package will not be opened during transport	■	☐
Any vehicle transporting marijuana or marijuana product will travel directly from the shipping marijuana establishment to the receiving marijuana establishment, and will not make any unnecessary stops in between except to deliver or pick up marijuana or marijuana product at any other licensed marijuana establishment	■	☐
When the marijuana establishment receives marijuana or marijuana product from another licensed marijuana establishment, the recipient of the shipment will use the marijuana inventory tracking system to report the type, amount, and weight of marijuana or marijuana product received	■	☐
The marijuana establishment will refuse to accept any shipment of marijuana or marijuana product that is not accompanied by the transport manifest	■	☐

RECEIVED
AUG 03 2016
ALCOHOL MARIJUANA CONTROL OFFICE
STATE OF ALASKA

Alcohol and Marijuana Control Office
550 W 7th Avenue, Suite 1600
Anchorage, AK 99501
marijuana.licensing@alaska.gov
https://www.commerce.alaska.gov/web/amco
Phone: 907.269.0350

Alaska Marijuana Control Board

Form MJ-01: Marijuana Establishment Operating Plan

Describe how marijuana or marijuana product will be prepared, packaged, and secured for shipment:

Packaging and labeling of marijuana will comply with all safety standards and state & local government requirements (3 AAC 306.565, 3 AAC 306.570). Einstein Labs will maintain discreet packaging in wholesale and pre-packaged items as well as during the testing process and ensure cleanliness and food safety standards are maintained throughout the entire packaging process. Any anomalies, mistakes or changes that occur during the packaging and labeling process will be communicated to a supervisor immediately at which point the supervisor shall make the necessary corrections to the electronic inventory tracking system and notify the Marijuana Control Board as necessary.

Products will be packaged for retail and wholesale sales to marijuana product manufacturing facilities and retail stores. Testing will be conducted to ensure the batch is safe and can be prepped for sale and delivery.

See Attachment S for Continued Information

Describe the type of locked, safe, and secure storage compartments that will be used in any vehicles transporting marijuana or marijuana product:

When transporting inventory (marijuana product) to a testing facility, product manufacturing facility or retail store, based on purchase orders from licensed marijuana establishments the electronic inventory tracking system labels will allow the packaged items to be transferred legally with a transport manifest. Product will be placed within a sealed and tamper-evident shipping container, affixed with a proper label on the shipping container and with a valid transport manifest attached at all times (3 AAC 306.750).

Einstein Labs will utilize both a third party delivery service (Valkyrie Security or comparable) as well as authorized employees to transport and deliver marijuana and marijuana product to and from the facility.

See Attachment T for Continued information

RECEIVED
AUG 03 2016
ALCOHOL MARIJUANA CONTROL OFFICE
STATE OF ALASKA

Alcohol and Marijuana Control Office
550 W 7th Avenue, Suite 1600
Anchorage, AK 99501
marijuana.licensing@alaska.gov
https://www.commerce.alaska.gov/web/amco
Phone: 907.269.0350

Alaska Marijuana Control Board

Form MJ-01: Marijuana Establishment Operating Plan

(Additional Space as Needed):

Attachment S Preparing, Packaging, and Securing Marijuana for Transport Continued (2):

Edibles (Energy Drink, Hard Candy, Truffles, Chocolate Melts & Chocolate Chip Cookie Bites (as examples))

Single-Serving Edible Marijuana Products:

- Single unit for sale;
- Containing 5mg or less of active THC; and

Single-Serving Edible Marijuana Products:

- More than one, packaging- and labeling-compliant Single-Serving Edible Marijuana Product, placed in external packaging, as the unit for sale to the consumer;
- Total amount of active THC in unit for sale cannot exceed 50mg; and

Multiple-Serving Edible Marijuana Products:

- More than one, packaging- and labeling-compliant Single-Serving Edible Marijuana Product, placed in external packaging, as the unit for sale to the consumer;
- Containing more than 5mg active THC but no more than 50mg; and
- The product is not a bundle of individually packaged and compliant Single- Serving Edible Marijuana Products, but product has demarcations that allow it to be easily separated at each single serving of active THC.

Authorized employees will package concentrates, marijuana products and edibles in sanitized, air-tight (food grade as applicable) containers labeled with compliant labeling information and a barcode for tracking purposes in Metrc. Packaged items will be stored in dry or refrigerator storage and quarantine until transferred to another licensed facility.

Packaging

Due to the variety of marijuana products being produced at Einstein Labs there will be a number of packaging options in order to ensure proper storage and security of the product as well as to ensure packaging meets all regulations pursuant to 3 AAC 306.565. Packaging will consist of wholesale and packaged for retail sales packaging options.

RECEIVED
AUG 03 2016
ALCOHOL MARIJUANA CONTROL OFFICE
STATE OF ALASKA

Alcohol and Marijuana Control Office
550 W 7th Avenue, Suite 1600
Anchorage, AK 99501
marijuana.licensing@alaska.gov
https://www.commerce.alaska.gov/web/amco
Phone: 907.269.0350

Alaska Marijuana Control Board

Form MJ-01: Marijuana Establishment Operating Plan

(Additional Space as Needed):

Attachment S Preparing, Packaging, and Securing Marijuana for Transport Continued:

Marijuana will be tracked in the electronic inventory tracking system to ensure proper care and handling through packaging, transport and sale process per 3 AAC 306.540 requirements. All applicable warnings will be listed and labels will be secured & clearly marked as outlined in 3 AAC 306.570 as well as meet all scale statutes and requirements (AS 45.77.080, 3 AAC 306.745) outlined below.

Einstein Labs will package non-edible or topical marijuana product into packages not to be repackaged as well as bulk packages not to exceed five (5) pounds, pre-packaged edibles, tinctures, salves and lotions, not to exceed 5mg per serving and 50mg total serving size per container. Vape pens will also be pre-packaged to include .25g to 1g of oil in each pen/vial.

Product List to be Packaged:

Concentrates
Shatter
The Clear
Amberglass
Live Resin- Sugar Silk & Sugar Sap
Crumble
Budder
Honeycomb
Rosin
Cannabis Oil
Bubble Hash
Kief

Other
Caviar Nugs, Caviar Joints & Vape Pens & Cartridges

Topical
Tinctures, Lotion, & Salve

RECEIVED
AUG 03 2016
ALCOHOL MARIJUANA CONTROL OFFICE
STATE OF ALASKA

Alcohol and Marijuana Control Office
550 W 7th Avenue, Suite 1600
Anchorage, AK 99501
marijuana.licensing@alaska.gov
https://www.commerce.alaska.gov/web/amco
Phone: 907.269.0350

(Additional Space as Needed):

Attachment S Preparing, Packaging, and Securing Marijuana for Transport Continued (3):

Wholesale packaging will consist of mylar bags (opaque as necessary to meet state and local regulations), glass & plastic jars and parchment paper as needed. Product will be weighed in accordance to the order list from the facility receiving the product and then packaged into wholesale packaging starting at half (1/2) an ounce to one (1) pound increments. A shipping and facility label will be attached to the container once the order is ready to ship (See label below).

Packaging for retail sale will consist of a combination of the following packaging styles (opaque and child-resistant as necessary to meet state and local regulations), and be packaged in accordance with weight, dimensions, etc. and in accordance with all state and local regulations:

Concentrates will be packaged in mylar bags w/ parchment paper, plastic or glass container placed into a mylar bag or a applicator syringe placed into a mylar bag.

Topicals will be packaged in plastic or metal containers & bottles, some containers will be placed in mylar bags and some will stand alone.

Tinctures & edibles will be packaged in plastic, glass or metal bottles (for liquids), single serving plastic and cardboard edible containers and multiple serving plastic and cardboard edible containers. Containers will be placed in mylar bags as necessary to meet state and local regulations for shipping to retail stores.

Scales

Einstein Labs shall use certified scales incompliance with the Alaska Weights and Measures Act. Product will be weighed on scales certified by the Alaska Department of Weights & Measures as required by state and local regulations & statutes (AS 45.75.080, 3 AAC 306.745). Registration and inspection reports will be kept on the licensed premise and will be available upon request to the Alcohol & Marijuana Control Board staff and/or Director. Scales will be checked for accuracy after weighing each product by placing a calibration weight on the scale, equal to what is being weighed (i.e. 1 gram calibration weight = 1 grams of product) up to five (5) pounds, this will ensure that the scale is accurate and that each product has a weight control measure in place.

RECEIVED
AUG 03 2016
ALCOHOL MARIJUANA CONTROL OFFICE
STATE OF ALASKA

Alcohol and Marijuana Control Office
550 W 7th Avenue, Suite 1600
Anchorage, AK 99501
marijuana.licensing@alaska.gov
https://www.commerce.alaska.gov/web/amco
Phone: 907.269.0350

(Additional Space as Needed):

Attachment S Preparing, Packaging, and Securing Marijuana for Transport Continued (4):

Any scale that does not meet quality control standards will be replaced before any more product is weighed. Scales will be upgraded and certified as needed to ensure accurate weight. Two (2) scales will be used to ensure large and small products will have accurate weight. The following scales will be used:

Scales

- A&D Legal Trade Large Scale (or comparable per requirements, 3 AAC 306.745)
- A&D FX 1200iN Integrated Scale (or comparable per requirements, 3AAC 306.745)

Prepping Material

Employees will ensure they have met sanitary guidelines as outlined in 3 AAC 306.545 for handling marijuana including; gloves, smocks, shoes, hair nets, using sanitary instruments before handling and packaging marijuana product and following Alaska Food Safety Code 18 AAC 31 as applicable to any kitchen activities related health and safety standards for retail food establishments.

Marijuana will be handled by authorized personnel who have been trained on how to use and quality check the scales, use the inventory tracking system to track and create the necessary labels and barcodes for packaging, transportation and sale and who clearly understand and abide by all health and safety standards.

Authorized employees will take containers of marijuana product and weigh out the desired amount per product order from product manufacturing facilities and retail stores as well as for testing purposes. Marijuana product used for creating edibles will be packaged for edible recipes and once baked, cooked or made into an edible product will be packaged and labeled according to the list of items above.

Once weighed and packaged, the product will be entered into the inventory tracking system and new labels will be generated as applicable and categories created such as edibles, concentrates, strains and more. Once packaged with all applicable labels it will be stored in storage and/or quarantine in dry or refrigerated storage.

RECEIVED
AUG 03 2016
ALCOHOL MARIJUANA CONTROL OFFICE
STATE OF ALASKA

Alcohol and Marijuana Control Office
550 W 7th Avenue, Suite 1600
Anchorage, AK 99501
marijuana.licensing@alaska.gov
https://www.commerce.alaska.gov/web/amco
Phone: 907.269.0350

(Additional Space as Needed):

Attachment S Preparing, Packaging, and Securing Marijuana for Transport Continued (5):

Testing Preparation and Packaging

Marijuana and marijuana product that will be sent in for testing will packaged in the same packaging required for each product (wholesale or retail packaging, minus the confirmed testing requirement label) and will be labeled with a blue, "Testing Label" in order for authorized employees to recognize it as being in the testing process. Marijuana and marijuana product to be tested will be packaged in amounts as outlined by the licensed marijuana testing facility or in regulatory requirements as outlined by state and local regulations. Product labeled for testing will be entered into the electronic inventory tracking system and if returned to the facility will be disposed of according to the waste disposal policy and procedure.

Labels

Einstein Labs will follow labeling requirements including not being labeled as organic as outlined in 3 AAC 306. 570. Marijuana products and edible creations packaged for a retail store without repackaging will affix a label to each package of marijuana product that contains the following statements per 3 AAC 306.306.570(c)(4):

- "Marijuana has intoxicating effects and may be habit forming and addictive"
- "Marijuana impairs concentration, coordination, and judgment. Do not operate a vehicle or machinery under its influence"
- "There are health risks associated with consumption of marijuana"
- "For use only by adults twenty-one and older. Keep out of the reach of children"
- "Marijuana should not be used by women who are pregnant or breast feeding"

Marijuana product may also contain the following labels as appropriate for edible and concentrate products:

- Date on which the product was packaged
- If perishable, a suggested use-by date
- Total milligrams of active cannabinoids and terpinoids in the product, as provided by the independent testing laboratory
- A list of all ingredients and major food allergens

RECEIVED
AUG 03 2016
ALCOHOL MARIJUANA CONTROL OFFICE
STATE OF ALASKA

Alcohol and Marijuana Control Office
550 W 7th Avenue, Suite 1600
Anchorage, AK 99501
marijuana.licensing@alaska.gov
https://www.commerce.alaska.gov/web/amco
Phone: 907.269.0350

Alaska Marijuana Control Board

Form MJ-01: Marijuana Establishment Operating Plan

(Additional Space as Needed):

Attachment S Preparing, Packaging, and Securing Marijuana for Transport Continued (6):

- Net weight of the product
- An edible warning that states: "Caution: When eaten or swallowed, the intoxicating effects of this drug may be delayed by 2 or more hours."
- If concentrated cannabis was added to the product, a disclosure of the type of extraction process and any solvent, gas or other chemical used in the extraction process, or any other compound added to the concentrated cannabis.

Marijuana product sold to any product manufacturing facility or retail store will be labeled in English, with the following facility and shipping information:

- The name & license of the marijuana product manufacturing facility in which it was processed
- Cannabinoid potency profile
- A statement listing the results of microbial testing
- A statement listing the results of residual solvent testing
- A list of the following contaminants for which it was tested; molds, mildew, filth, herbicides, pesticides, fungicides, and harmful chemicals
- A list of contaminants not tested for (as applicable)
- The name of the licensed marijuana testing facility that performed required tests, required expiration date as applicable, and the testing results

Wholesale Packaging Labels

All wholesale marijuana delivered to licensed marijuana establishments for sale as outlined in regulation 3 AAC 306.570(d) will include a label with testing information that will be placed on the shipping container. If a batch has not been tested for each contaminant, the label will include a statement identifying the contaminant that was not tested for per 3 AAC 306.475(f). The label will have the following information and test results:

- A cannabinoid potency profile expressed in range of percentages that extends from the lowest percentage to highest percentage of concentration for each cannabinoid listed from every test conducted on that strain from the cultivation facility in the last 3 months;
- Statement listing the results of the microbial testing
- Statement listing the results of residual solvent testing
- A statement listing the following contaminants for which it was tested; molds, mildew, filth, harmful chemicals and any herbicides, pesticides or fungicides used and will include a statement identifying each contaminant that was not tested in the batch.

RECEIVED
AUG 03 2016
ALCOHOL & MARIJUANA CONTROL OFFICE
STATE OF ALASKA

Alcohol and Marijuana Control Office
550 W 7th Avenue, Suite 1600
Anchorage, AK 99501
marijuana.licensing@alaska.gov
https://www.commerce.alaska.gov/web/amco
Phone: 907.269.0350

Alaska Marijuana Control Board

Form MJ-01: Marijuana Establishment Operating Plan

(Additional Space as Needed):

Attachment S Preparing, Packaging, and Securing Marijuana for Transport Continued (7):

Sample Of Shipping & Wholesale Label

Einstein Labs

License # 10082
Batch # 123456

Net Weight: _____

Ingredients: extraction processes, pesticides, herbicides, fungicides, growing mediums, soil amendments, fertilizers, extraction aides and etc.

Tested By: Licensed Testing Facility

Tracking Label Affixed Here

Tested By: Licensed Testing Facility
License # 10000

Expiration Date: _____

THC: ____ THCA:____ CBD: ____
CBDA:____ CBN:____

Microbial Test: Pass __ Fail __
Residual Solvent Testing: Pass __ Fail __
Contaminants Test Result:
Mold: _____
Mildew: _____
Filth: _____
Herbicides: _____
Pesticides: _____
Fungicides: _____
Harmful Chemicals: _____

Tracking and label sample below to be used on packaging label as outlined by the state approved electronic inventory system Metrc.

Package tag

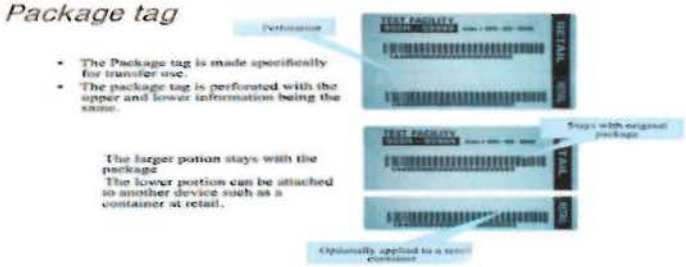

Management will be responsible for ensuring that the labeling placed on packages by the product manufacturing facility is compliant, complete, accurate, visible and not misleading. Before preparing for shipping of marijuana product, management or authorized employees will perform visual inspections of the label to ensure the above quality control measures are in place at all times. Each inspection of labels will be recorded and kept as part of the overall business record.

RECEIVED
AUG 03 2016
ALCOHOL MARIJUANA CONTROL OFFICE
STATE OF ALASKA

Alcohol and Marijuana Control Office
550 W 7th Avenue, Suite 1600
Anchorage, AK 99501
marijuana.licensing@alaska.gov
https://www.commerce.alaska.gov/web/amco
Phone: 907.269.0350

Alaska Marijuana Control Board

Form MJ-01: Marijuana Establishment Operating Plan

(Additional Space as Needed):

Attachment S Preparing, Packaging, and Securing Marijuana for Transport Continued (8):

Transportation Plan

Each item secured for shipping will be accompanied by a transport manifest and all marijuana product will be placed within a sealed and tamper-evident shipping container, affixed with the proper label on the shipping container and product.

When securing marijuana product for transport, management will take necessary steps to verify that the establishment receiving the shipment has a valid and current license in Metrc, inventory control tracking system. If the receiving facility is found to have an invalid, lost, revoked, or expired license, the establishment will be informed that the sale and shipment can not be processed. Once Einstein Labs has collected information confirming the receiving facility has a current license, they will finalize the sale and make arrangements for delivery.

The following transport information will be recorded in Metrc:

- The name and license number of the receiving and providing licensed facility;
- The type, amount and weight of the marijuana product being transported;
- The name and permit number of the transportation agent;
- The time of departure and expected delivery; and
- The make, model, and license plate number of the transporting vehicle.

A complete printed transport manifest will be kept with the marijuana product at all times during shipment and delivery. Management will also keep a copy of the transport manifest on record at the product manufacturing facility as part of the overall business records as required by state regulations (3 AAC 306.755).

The individual or individuals transporting the batch of marijuana will have a marijuana handler permit and will carry the permit on their person throughout the transport. The transportation agent will also carry an Alaska driver' license, insurance and registration for the transport vehicle, and a method of reliable communication with the product manufacturing facility. When deemed necessary by Ownership and Management, two (2) transportation agents will perform delivery services for multiple or lengthy deliveries, when the delivery contains large amounts od marijuana or when the delivery is located in what appear to be unsafe areas.

RECEIVED
AUG 03 2016
ALCOHOL & MARIJUANA CONTROL OFFICE
STATE OF ALASKA

Alcohol and Marijuana Control Office
550 W 7th Avenue, Suite 1600
Anchorage, AK 99501
marijuana.licensing@alaska.gov
https://www.commerce.alaska.gov/web/amco
Phone: 907.269.0350

Alaska Marijuana Control Board

Form MJ-01: Marijuana Establishment Operating Plan

(Additional Space as Needed):

Attachment T Locked, Safe, Secured Storage Compartment Continued:

Valkyrie Security and Asset Protection Inc. (current security company) will use armored staff and armored vehicles and part of Einstein Labs delivery protocol. Their transport staff will secure product in locked containers with tamper resistant locks prior to leaving the licensed facility. All locked containers will be with armed transport staff at all times and only removed from the vehicle upon arrival to the receiving licensed facility. The tamper resistant locks will only be removed in the presence of an authorized person at the receiving licensed facility.

Authorized Einstein Labs employees and the third-party transportation company will utilize the following locked, safe and secure storage compartments when transporting marijuana product as outlined in 3 AAC 306.750.

Shipping Containers & Accessories:

Lockable storage container or one of comparable features and quality:

Deluxe Security Tape (Tamper Proof Tape) featuring a highly visible "opened" sticker when tampered with:

RECEIVED
AUG 03 2016
ALCOHOL MARIJUANA CONTROL OFFICE
STATE OF ALASKA

Alcohol and Marijuana Control Office
550 W 7th Avenue, Suite 1600
Anchorage, AK 99501
marijuana.licensing@alaska.gov
https://www.commerce.alaska.gov/web/amco
Phone: 907.269.0350

Alaska Marijuana Control Board

Form MJ-01: Marijuana Establishment Operating Plan

(Additional Space as Needed):

Attachment T Locked, Safe, Secured Storage Compartment Continued (2):

Plastic Truck Seals (or similar) featuring a consecutively numbered, tamper resistant band with a 55 lbs breaking strength, double clicking locking mechanism for strength:

The following locked, safe and secure storage compartments that will be used in Einstein Labs vehicles transporting marijuana or marijuana products – such as the model below or comparable type, features, and quality:

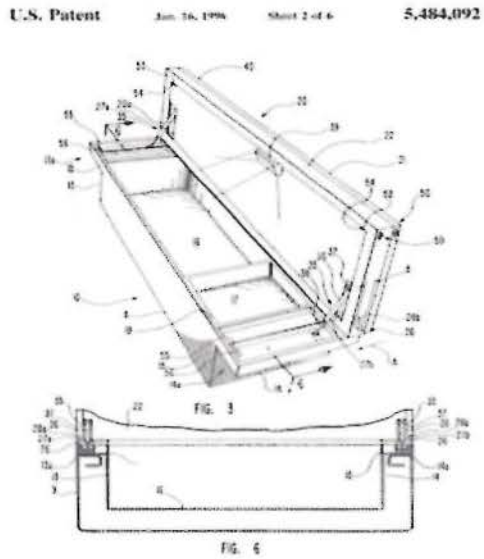

RECEIVED
AUG 03 2016
ALCOHOL MARIJUANA CONTROL OFFICE
STATE OF ALASKA

Alcohol and Marijuana Control Office
550 W 7th Avenue, Suite 1600
Anchorage, AK 99501
marijuana.licensing@alaska.gov
https://www.commerce.alaska.gov/web/amco
Phone: 907.269.0350

Alaska Marijuana Control Board

Form MJ-01: Marijuana Establishment Operating Plan

(Additional Space as Needed):

Attachment T Locked, Safe, Secured Storage Compartment Continued (3):

All marijuana to be transported and delivered to and from a marijuana establishment will be logged in the inventory tracking system and will record the type, amount & weight, and model & license plate number of the transporting vehicle.

In order to further enhance the security of transportation employees and the community while transporting marijuana and cash employees will dress in plain clothes and utilize unmarked vehicles in order to not call unnecessary attention to themselves. Any vehicle transporting marijuana products will be unmarked and inconspicuous. Vehicles that will be used for transportation of marijuana products will contain a secure and sanitary area affixed to the inside of the transportation vehicle that will lock and will ensure the marijuana products cannot be seen by anyone from outside the transportation vehicle. The secure storage area within the transportation vehicle will be sanitized before and after each use.

Einstein Labs understands and appreciates that the transportation of marijuana carries a large responsibility and requires careful planning. The Einstein Labs team takes the transportation of marijuana products very seriously as the safety of the public, the transporter, and the products are of the utmost importance to us. Whether transporting marijuana products to and from a testing facility or to another marijuana establishment, our Company will always practice safety, care, organization, patience, and diligence when driving products around the State of Alaska.

RECEIVED
AUG 03 2016
ALCOHOL MARIJUANA CONTROL OFFICE
STATE OF ALASKA

Alcohol and Marijuana Control Office
550 W 7th Avenue, Suite 1600
Anchorage, AK 99501
marijuana.licensing@alaska.gov
https://www.commerce.alaska.gov/web/amco
Phone: 907.269.0350

Alaska Marijuana Control Board

Form MJ-01: Marijuana Establishment Operating Plan

Section 7 – Signage and Advertising

Describe any signs that you intend to post on your establishment with your business name, including quantity and dimensions:

The facilityê signage is important in maintaining safety and security of the overall operations of the business and community. Einstein Labs will not have any exterior business signs to ensure that safety risks are mitigated as much as possible. The only signs located on the exterior of the building will be; No Trespassing, No Loitering, No Smoking, Restricted Access Area, Parking and No Parking (as applicable). Also, by having no exterior signage and being discrete, Einstein Labs is focusing on helping prevent crimes or situations associated with knowledge of an establishment to minors and criminal enterprises, therefore helping to present the need for violence and other heightened situations to occur in the manufacturing of marijuana (Cole Memorandum, 2013).

If you are not applying for a retail marijuana store license, you do not need to complete the rest of Section 7, including Page 17.

Restriction on advertising of marijuana and marijuana products (3 AAC 306.360):

All licensed retail marijuana stores must meet minimum standards for signage and advertising.

Applicants should be able to answer "Agree" to all items below.

No advertisement for marijuana or marijuana product will contain any statement or illustration that:	Agree	Disagree
Is false or misleading	■	☐
Promotes excessive consumption	■	☐
Represents that the use of marijuana has curative or therapeutic effects	■	☐
Depicts a person under the age of 21 consuming marijuana	■	☐
Includes an object or character, including a toy, a cartoon character, or any other depiction designed to appeal to a child or other person under the age of 21, that promotes consumption of marijuana	■	☐

RECEIVED
AUG 03 2016
ALCOHOL MARIJUANA CONTROL OFFICE
STATE OF ALASKA

Alcohol and Marijuana Control Office
550 W 7th Avenue, Suite 1600
Anchorage, AK 99501
marijuana.licensing@alaska.gov
https://www.commerce.alaska.gov/web/amco
Phone: 907.269.0350

Alaska Marijuana Control Board

Form MJ-01: Marijuana Establishment Operating Plan

No advertisement for marijuana or marijuana product will be placed:	Agree	Disagree
Within one thousand feet of the perimeter of any child-centered facility, including a school, childcare facility, or other facility providing services to children, a playground or recreation center, a public park, a library, or a game arcade that is open to persons under the age of 21	■	☐
On or in a public transit vehicle or public transit shelter	■	☐
On or in a publicly owned or operated property	■	☐
Within 1000 feet of a substance abuse or treatment facility	■	☐
On a campus for post-secondary education	■	☐

Signage and Promotional Materials:	Agree	Disagree
I understand and agree to follow the limitations for signs under 3 AAC 306.360(a)	■	☐
The retail marijuana store will not use giveaway coupons as promotional materials, or conduct promotional activities such as games or competitions to encourage sale of marijuana or marijuana products	■	☐
All advertising for marijuana or any marijuana product will contain the warnings required under 3 AAC 306.360(e)	■	☐

RECEIVED
AUG 03 2016
ALCOHOL MARIJUANA CONTROL OFFICE
STATE OF ALASKA

Alcohol and Marijuana Control Office
550 W 7th Avenue, Suite 1600
Anchorage, AK 99501
marijuana.licensing@alaska.gov
https://www.commerce.alaska.gov/web/amco
Phone: 907.269.0350

Alaska Marijuana Control Board

Form MJ-01: Marijuana Establishment Operating Plan

Section 8 – Control Plan for Persons Under the Age of 21

Describe how the marijuana establishment will prevent persons under the age of 21 from gaining access to any portion of the licensed premises and marijuana items:

Einstein Labs will work diligently to ensure that no person under the age of 21 years gains access to any portion of the licensed premises and marijuana items.

The perimeter is surrounded by a 6 foot fence and will be monitored 24 hours per day, seven days per week. There will be signs indicating no trespassing and no loitering in order to ensure that any unauthorized persons including individuals under 21 years of age are not allowed on the premises. In the case of an unauthorized entrance into the premises, the security system will alarm and notify law enforcement and Einstein Labs Management according to the security procedures.

Entrances to the building will have restricted access area signs that indicate it is unlawful for individuals under the age of 21 years and unauthorized persons to enter. All visitors will be required to show valid photo identification before being allowed into the facility. Valid identification as outlined by 3 AAC 306.350 to assess age include; an unexpired, unaltered passport, an unexpired, unaltered drivers license; instruction permit, or identification card of any state or territory of the United States, the District of Columbia or a province of Canada or an identification card issued by a federal or state agency authorized to issue a drivers license of identification card.

See Attachment U for Continued Information

I declare under penalty of perjury that I have examined this form, including all accompanying schedules and statements, and to the best of my knowledge and belief find it to be true, correct, and complete.

RECEIVED
AUG 03 2016
ALCOHOL MARIJUANA CONTROL OFFICE
STATE OF ALASKA

Signature of licensee

Justin Roland
Printed name

Subscribed and sworn to before me this 3rd day of August, 2016.

ELIZABETH L. HINSON
NOTARY PUBLIC
STATE OF ALASKA

Notary Public in and for the State of Alaska.

My commission expires: 1/31/2018 8th.

Alcohol and Marijuana Control Office
550 W 7th Avenue, Suite 1600
Anchorage, AK 99501
marijuana.licensing@alaska.gov
https://www.commerce.alaska.gov/web/amco
Phone: 907.269.0350

Alaska Marijuana Control Board

Form MJ-01: Marijuana Establishment Operating Plan

(Additional Space as Needed):

Attachment U Control Plan for Persons Under the Age of 21 Continued:

If any of the documentation appears to be fraudulent, is not valid or appears suspicious, the individual will be asked to leave the premises and will not be allowed to enter the facility or secure side yard.

During business hours employees will be provided training on the importance of limiting loitering and learn skills to verbally remove individuals from the premises. If individuals are unwilling to leave the premises or continue to loiter in the general area, law enforcement will be notified. Employees will not engage in discussions with minors about the marijuana establishment, around the establishment or to promote its use to individuals under the age of 21 years at any time.

Einstein Labs will not have any exterior premises business sings to ensure minors are not openly exposed to the marijuana establishment if they are close in proximity to the location. Building sign usage is important in maintaining safety and security of the overall operations of the business and community and in protecting minors from knowledge that a marijuana business exists.

Advertisements, packaging and logos will not use images that specifically targets individuals under the age of 21 years as well as meet all applicable state and local regulations.

Einstein Labs will work with the community & Mountain View Community Council in order to promote a community friendly business that understands and advocates for the importance of limiting exposure of the licensed premises and marijuana items to individuals under the age of 21. Einstein Labs will utilize assistance from the community council, state and local government as needed to ensure compliance.

RECEIVED
AUG 03 2016
ALCOHOL MARIJUANA CONTROL OFFICE
STATE OF ALASKA