Alcohol and Marijuana Control Office
550 W 7th Avenue, Suite 1600
Anchorage, AK 99501
marijuana.licensing@alaska.gov
https://www.commerce.alaska.gov/web/amco
Phone: 907.269.0350

Alaska Marijuana Control Board

Form MJ-02: Premises Diagram

What is this form?

A detailed diagram of the proposed licensed premises is required for all marijuana establishment license applications, per 3 AAC 306.020(b)(8). **All areas designated as the licensed premises of a single license must be contiguous. All diagrams must have the licensed premises area labeled, and outlined or shaded as appropriate.**

What must be submitted with this form?

Applicants must attach multiple diagrams to this form, including (as applicable):

- **Diagram 1:**
  a diagram showing only the licensed premises areas that will be ready to be **operational at the time of your preliminary inspection** and license issuance;
- **Diagram 2:**
  if different than Diagram 1, a diagram outlining **all areas for which the licensee has legal right of possession** (a valid lease or deed), and clearly showing those areas' relationship to the current proposed licensed premises *(details of any planned expansion areas do not need to be included; a complete copy of Form MJ-14: Licensed Premises Diagram Change must be submitted and approved before any planned expansion area may be added to the licensed premises);*
- **Diagram 3:**
  a **site plan or as-built of the entire lot**, showing all structures on the property and clearly indicating which area(s) will be part of the licensed premises;
- **Diagram 4:**
  an **aerial photo of the entire lot and surrounding lots**, showing a view of the entire property and surrounding properties, and clearly indicating which area(s) will be part of the licensed premises *(this can be obtained from sources like Google Earth)*; and
- **Diagram 5:**
  a diagram of the **entire building in which the licensed premises is located**, clearly distinguishing the licensed premises from unlicensed areas and/or premises of other licenses within the building. If your proposed licensed premises is located within a building or building complex that contains multiple business and/or tenants, please provide the addresses and/or suite numbers of the other businesses and/or tenants *(a separate diagram is not required for an establishment that is designating the entire building as a single licensed premises).*

This form, and all necessary diagrams that meet the requirements on Page 2 of this form, must be completed and submitted to AMCO's main office before any new or transfer license application will be considered complete.

Section 1 – Establishment Information

Enter information for the business seeking to be licensed, as identified on the license application.

Licensee:	Valley Happiness LLC	**MJ License #:**	17612.		
License Type:	Limited Marijuana Cultivation				
Doing Business As:	Valley Happiness LLC				
Premises Address:	905 South Vicki way				
City:	Wasilla,	**State:**	Alaska	**ZIP:**	99654

AMCO
NOV 26 2019

Alaska Marijuana Control Board

Form MJ-02: Premises Diagram

Section 2 – Required Information

For your security, do not include locations of security cameras, motion detectors, panic buttons, and other security devices.
Items marked with a double asterisks (**) are only required for those retail marijuana establishments that are also applying for an onsite consumption endorsement.

The following details must be included in all diagrams:

- [x] License number and DBA
- [x] Legend or key
- [x] Color coding
- [x] Licensed Premises Area Labeled and Shaded, or Outlined as appropriate
- [x] Dimensions
- [x] Labels
- [x] True north arrow

The following additional details must be included in Diagram 1:

- [x] Surveillance room
- [x] Restricted access areas
- [x] Storage areas
- [x] Entrances, exits, and windows
- [x] Walls, partitions, and counters
- [x] Any other areas that must be labeled for specific license or endorsement types
- [x] ** Serving area(s)
- [x] **Employee monitoring area(s)
- [x] **Ventilation exhaust points, if applicable

The following additional details must be included in Diagram 2:

- [x] Areas of ingress and egress
- [x] Entrances and exits
- [x] Walls and partitions

The following additional details must be included in Diagrams 3 and 4:

- [x] Areas of ingress and egress
- [x] Cross streets and points of reference

The following additional details must be included in Diagram 5:

- [ ] Areas of ingress and egress
- [ ] Entrances and exits
- [ ] Walls and partitions
- [ ] Cross streets and points of reference

I declare under penalty of unsworn falsification that I have attached all necessary diagrams that meet the above requirements, and that this form, including all accompanying schedules, statements, and depictions is true, correct, and complete.

Signature of licensee

Raquel Luna
Printed name of licensee

Official Seal
Heather E. Christiansen
Notary Public-State of Alaska
My Comm. Expires 05/5/2022

Notary Public in and for the State of Alaska

My commission expires: 05/05/22

Subscribed and sworn to before me this 26th day of November, 2019.

AMCO
NOV 26 2019

License # 17612

Diagram 1

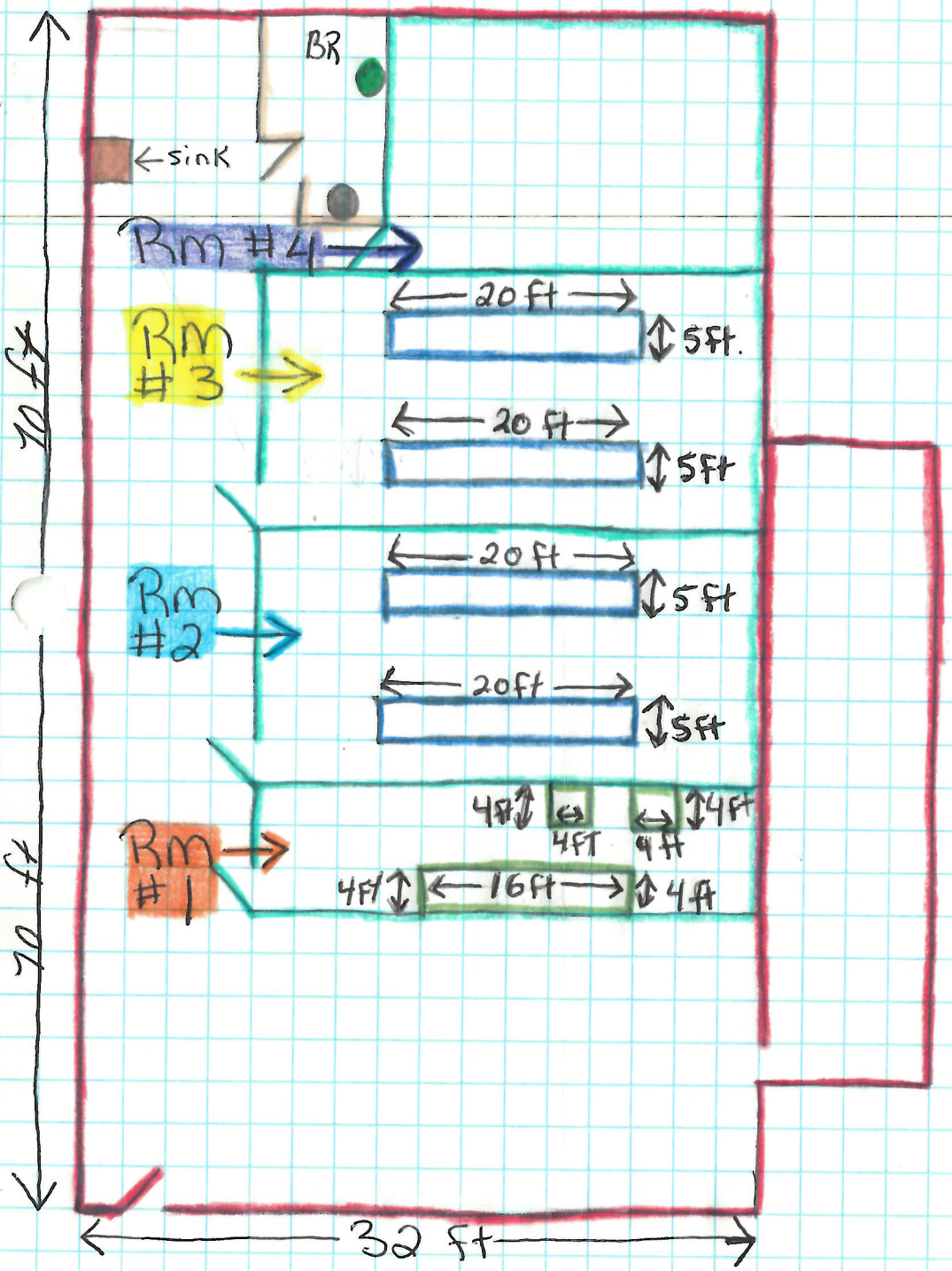

Legend

- Licensed Premises
- Restricted Access
- Room #1
- Room #2
- Room #3
- Room #4
- True North
- Toilet
- Shower
- Sink
- Bathroom

License # 17612
DBA - Valley Happiness LLC

- Room 2&3 Tables 5 ft x 20 ft Total square feet per Room 200 s Totaling 400 sq ft.

- Room-1 Tables 100 sq. ft.

AMCO
NOV 26 2019

First Floor Diagram 1-A

Legend
License # 1761
DBA- Valley Happiness
Building Dimension - 70 x 3
Labels -
True North -
Secured Entry/Exit
Room Dimesion -
walls - Inside
Exterior walls -
Aluminum Siding
Steel trusses
2 X 6 - Girts
2 x 4 - Framing
5/8 ply wood
5/8 - Sheet Rock
Steel Conex Equipment Storage -
- waste stor
- Soil storag
- Toilet
- Shower
- Sink.

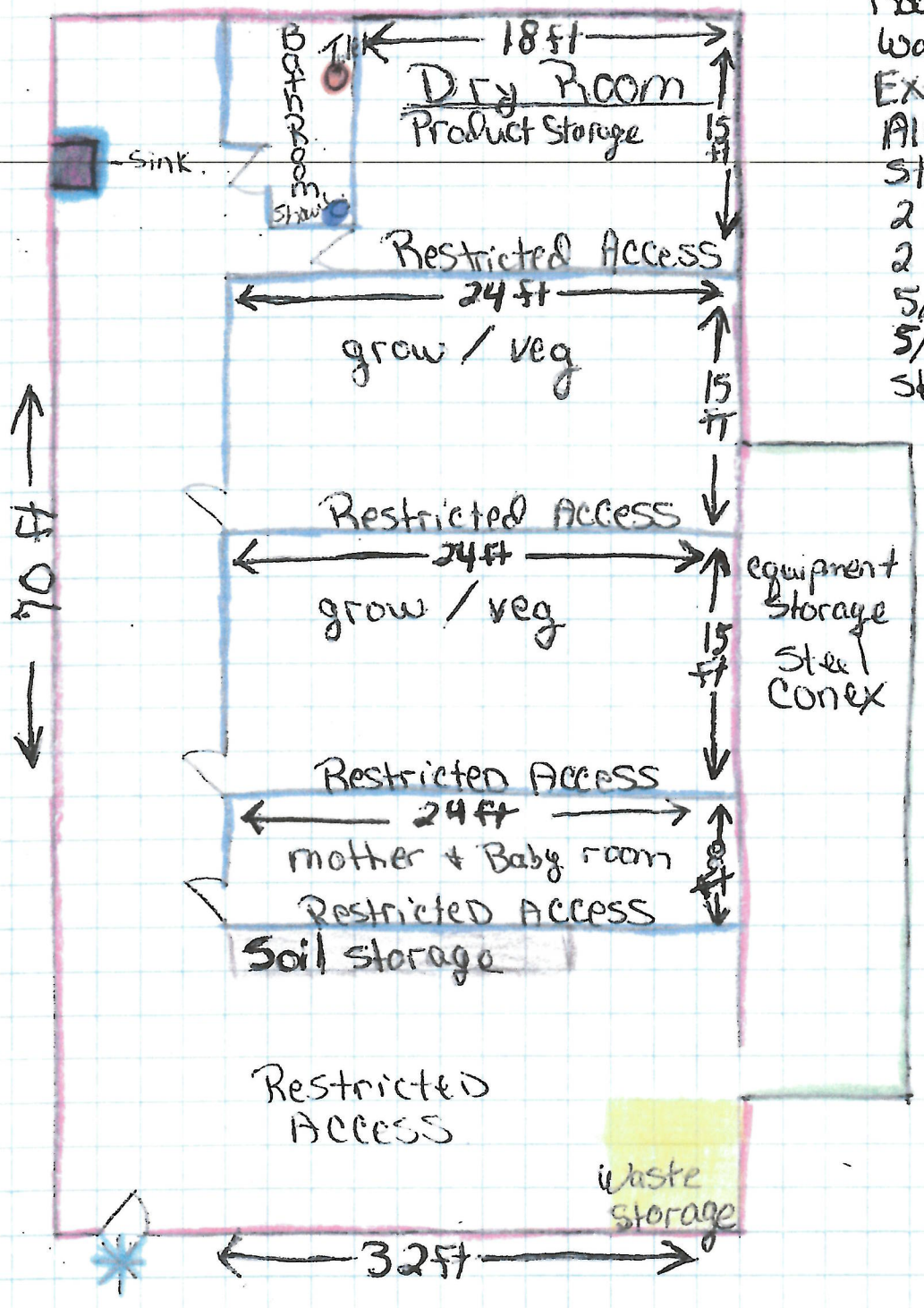

N

AMCO
NOV 26 2019

Up Stairs Floor Plan.

Addition To Diagram 1-B

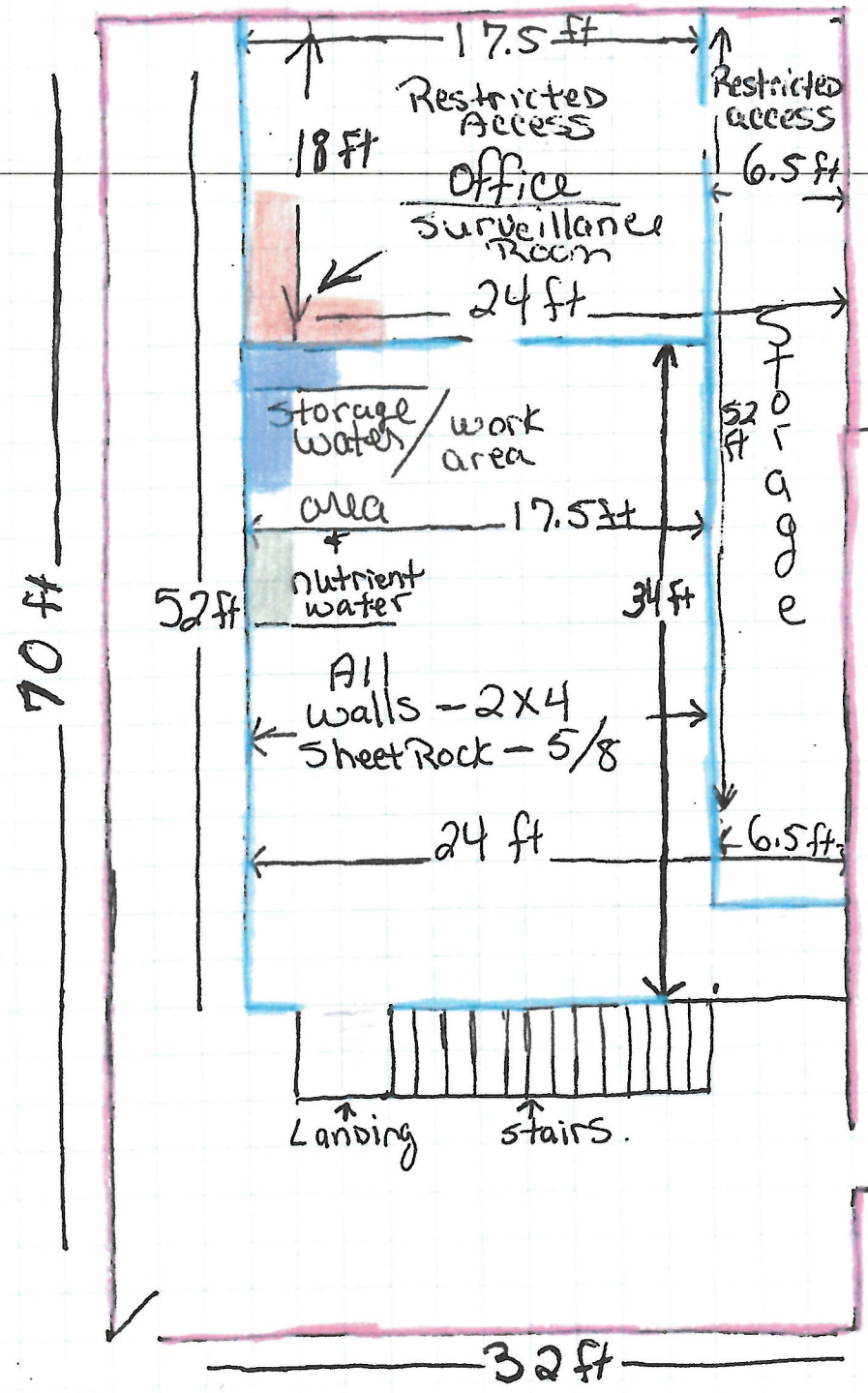

Legend

- Building Dimensions
- All walls - 2x4 5/8 sheetRock.
- Floor Joist 2x12 3/4 OSB
- Exterior walls Aluminum siding steel trusses 2x6 - girts 2x4 - framing 5/8 - plywood
- True north.
- Located Stor
- nutri Store
- Surve area off

N

License # 17612
DBA - Valley Happiness LLC.

AMCO
NOV 26 2019

Form MJ-02: Premises Diagram 3

Boardman Diagram.

Legend
License # - 17612
Dimension - 32' x
License Premises
Ingress + Egress
Road - Dead End Vicki Way
True North
Entrance + Exit

A- House
B- Shop
C- Cultivation facility.

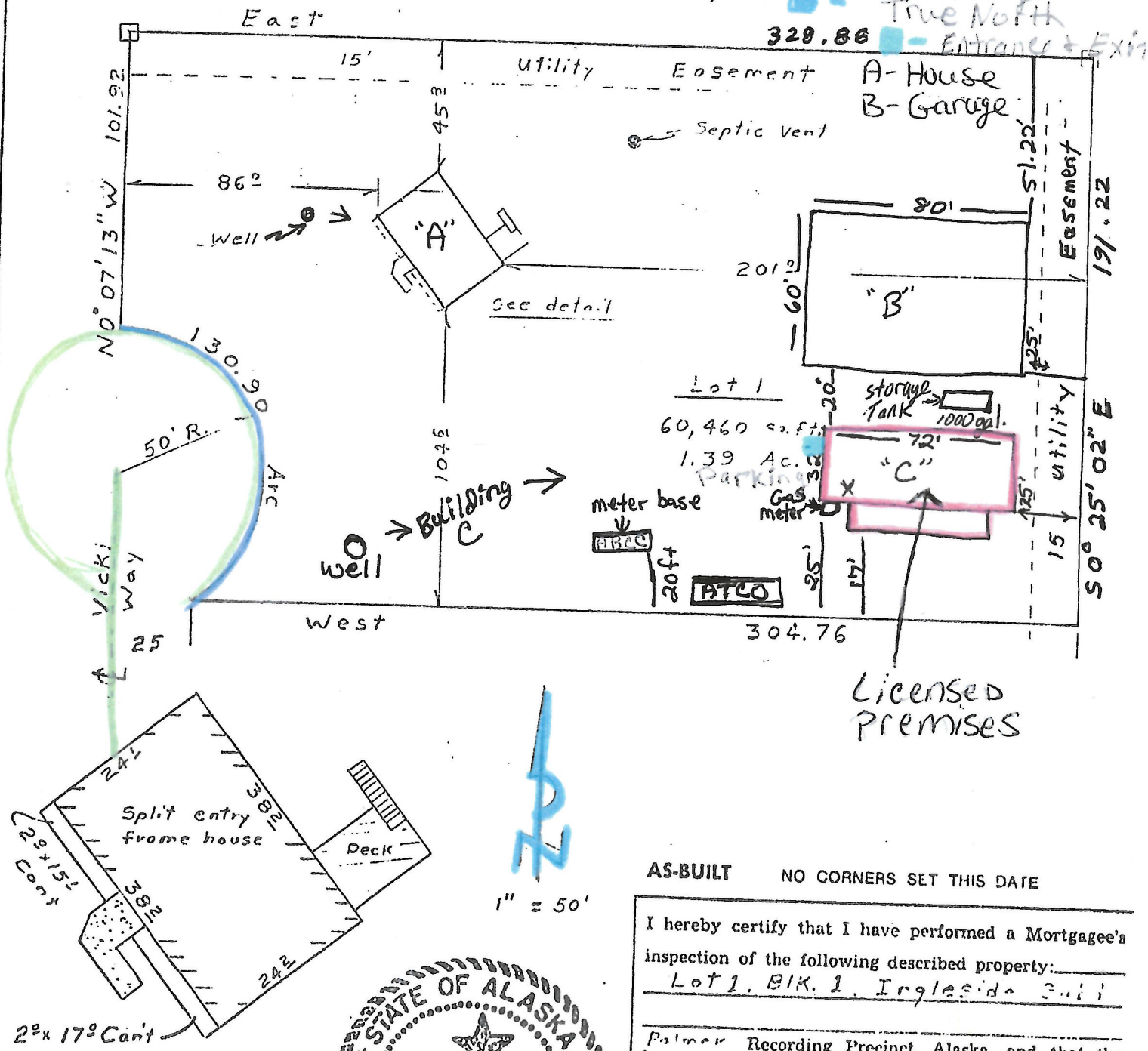

House Detail
1" = 20'

1" = 50'

AS-BUILT NO CORNERS SET THIS DATE

I hereby certify that I have performed a Mortgagee's inspection of the following described property: Lot 1, Blk. 1, Ingleside Sub.

Palmer Recording Precinct, Alaska, and that the improvements situated thereon are within the property lines and do not overlap or encroach on the property lying adjacent thereto, that no improvements on property lying adjacent thereto encroach on the premises in question and that there are no roadways, transmission lines or other visible easements on said property except as indicated hereon.

Dated at Wasilla, Alaska

this 8 day of November, 19..

S... Engineering

STATE OF ALASKA 49TH Gary D. Drasky 2234-S REGISTERED PROFESSIONAL LAND SURVEYOR

SEP 05 2019

EASEMENTS OF RECORD, OTHER THAN THOSE SHOWN ON THE RECORDED PLAT ARE NOT SHOWN HEREON.

Form MJ-02 Premises Diagram - Diagram 4-A

License # 17612
DBA - Valley Happiness LLC

"A" House
"B" garage/shop
"C" Licensed Premises.

Legend
- property line
- Licensed premises #C
- Entrance + Exit
- Vicki way
- True North
- Property Line / Building Dimensions.

N

AMCO SEP 05 2019

Form MJ-02 Premises Diagram - Diagram #4 - Addition B