Current approved diagrams

Alcohol and Marijuana Control Office
550 W 7th Avenue, Suite 1600
Anchorage, AK 99501
marijuana.licensing@alaska.gov
https://www.commerce.alaska.gov/web/amco
Phone: 907.269.0350

Alaska Marijuana Control Board

Form MJ-02: Premises Diagram

What is this form?

A detailed diagram of the proposed licensed premises is required for all marijuana establishment license applications, per 3 AAC 306.020(b)(8). All areas designated as the licensed premises of a single license must be contiguous.

What must be submitted with this form?

Applicants must attach multiple diagrams to this form, including (as applicable):

- Diagram 1:
  a diagram showing only the licensed premises areas that will be ready to be operational at the time of your preliminary inspection and license issuance;

- Diagram 2:
  if different than Diagram 1, a diagram outlining all areas for which the licensee has legal right of possession (a valid lease or deed), and clearly showing those areas' relationship to the current proposed licensed premises *(details of any planned expansion areas do not need to be included; a complete copy of Form MJ-14: Licensed Premises Diagram Change must be submitted and approved before any planned expansion area may be added to the licensed premises);*

- Diagram 3:
  a site plan or as-built of the entire lot, showing all structures on the property and clearly indicating which area(s) will be part of the licensed premises;

- Diagram 4:
  an aerial photo of the entire lot and surrounding lots, showing a view of the entire property and surrounding properties, and clearly indicating which area(s) will be part of the licensed premises *(this can be obtained from sources like Google Earth)*; and

- Diagram 5:
  a diagram of the entire building in which the licensed premises is located, clearly distinguishing the licensed premises from unlicensed areas and/or premises of other licenses within the building. If your proposed licensed premises is located within a building or building complex that contains multiple business and/or tenants, please provide the addresses and/or suite numbers of the other businesses and/or tenants *(a separate diagram is not required for an establishment that is designating the entire building as a single licensed premises)*.

This form, and all necessary diagrams that meet the requirements on Page 2 of this form, must be completed and submitted to AMCO's main office before any new or transfer license application will be considered complete.

Section 1 – Establishment Information

Enter information for the business seeking to be licensed, as identified on the license application.

Licensee:	Aurora Development Group, Inc.	MJ License #:	15557		
License Type:	Limited Marijuana Cultivation Facility				
Doing Business As:	Aurora Development Group, Inc.				
Premises Address:	1667 Amidon Drive				
City:	Fairbanks	State:	Alaska	ZIP:	99712-2836

AMCO Received 3/19/2019

Alaska Marijuana Control Board

Form MJ-02: Premises Diagram

Section 2 – Required Information

For your security, do not include locations of security cameras, motion detectors, panic buttons, and other security devices.

The following details must be included in all diagrams:

- ☐ License number and DBA
- ☐ Legend or key
- ☐ Color coding
- ☐ Dimensions
- ☐ Labels
- ☐ True north arrow

The following additional details must be included in Diagram 1:

- ☐ Surveillance room
- ☐ Restricted access areas
- ☐ Storage areas
- ☐ Entrances, exits, and windows
- ☐ Walls, partitions, and counters
- ☐ Any other areas that must be labeled for specific license types

The following additional details must be included in Diagram 2:

- ☐ Areas of ingress and egress
- ☐ Entrances and exits
- ☐ Walls and partitions

The following additional details must be included in Diagrams 3 and 4:

- ☐ Areas of ingress and egress
- ☐ Cross streets and points of reference

The following additional details must be included in Diagram 5:

- ☐ Areas of ingress and egress
- ☐ Entrances and exits
- ☐ Walls and partitions
- ☐ Cross streets and points of reference

State of Alaska
NOTARY PUBLIC
E. Ehle
My Commission Expires Jun 21, 2022

I declare under penalty of unsworn falsification that I have attached all necessary diagrams that meet the above requirements, and that this form, including all accompanying schedules, statements, and depictions is true, correct, and complete.

Signature of licensee

Nicthandhar Navachai
Printed name of licensee

E. Ehle
Notary Public in and for the State of Alaska

My commission expires: June 21, 2022

Subscribed and sworn to before me this 4th day of February, 20 19.

AMCO Received 3/19/2019

DIAGRAM 1
LICENSE #15557
AURORA DEVELOPMENT GROUP, INC

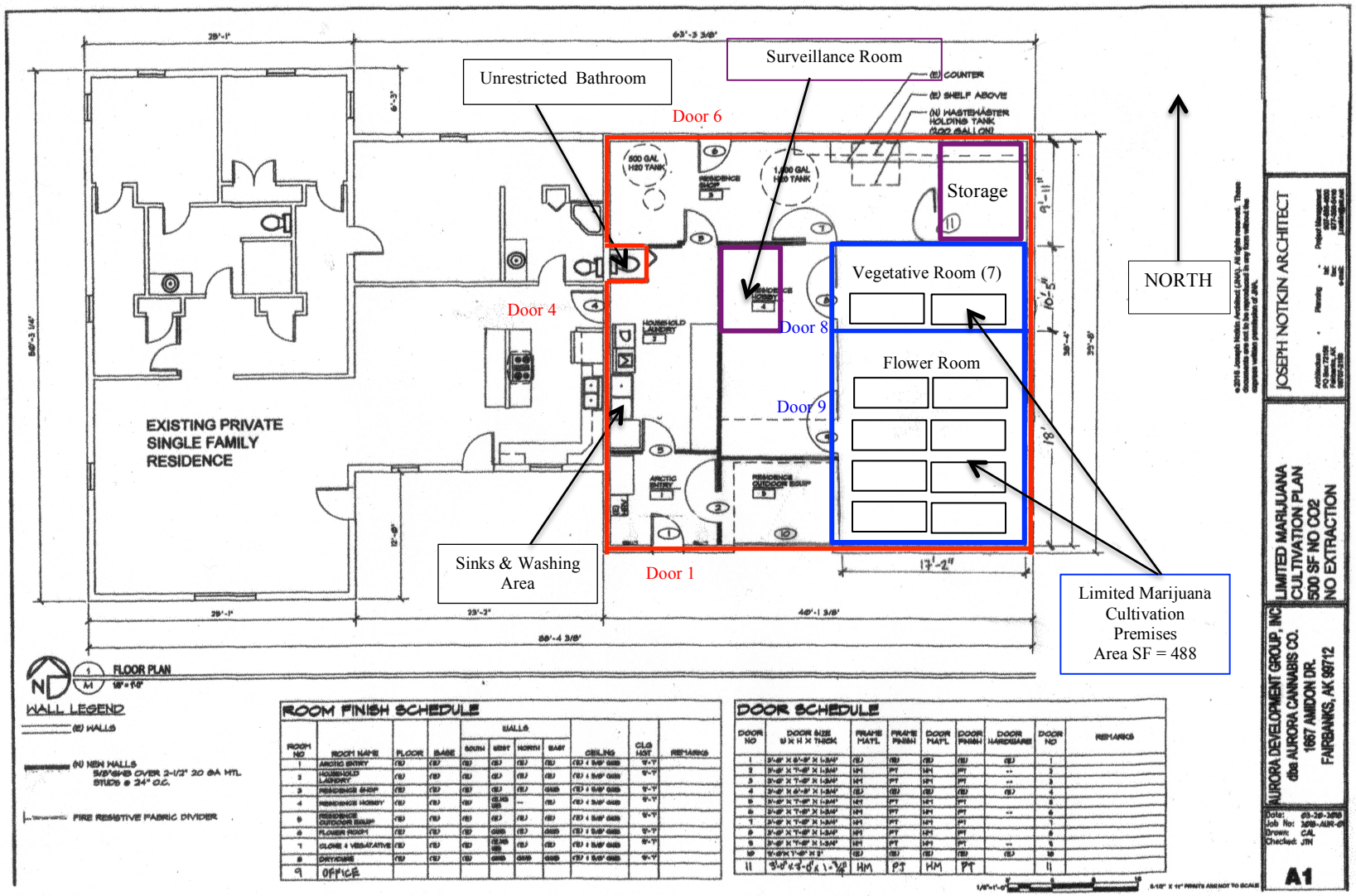

Red: Licensed Premises & Restricted Access Area
Blue: Cultivation Area = 488 SF
Purple: Surveillance Room, and Storage Room; (locked & secure room, authorize access only)

Door 1,4,6: Entrance & Exit to Licensed Premises
Door 1: Primary Entrance & Exit to Licensed Premises
Door 8, 9: Entrance & Exit to Cultivation Area

AMCO Received 4/1/2019

DIAGRAM 2 + 5
LICENSE #15557
AURORA DEVELOPMENT GROUP, INC

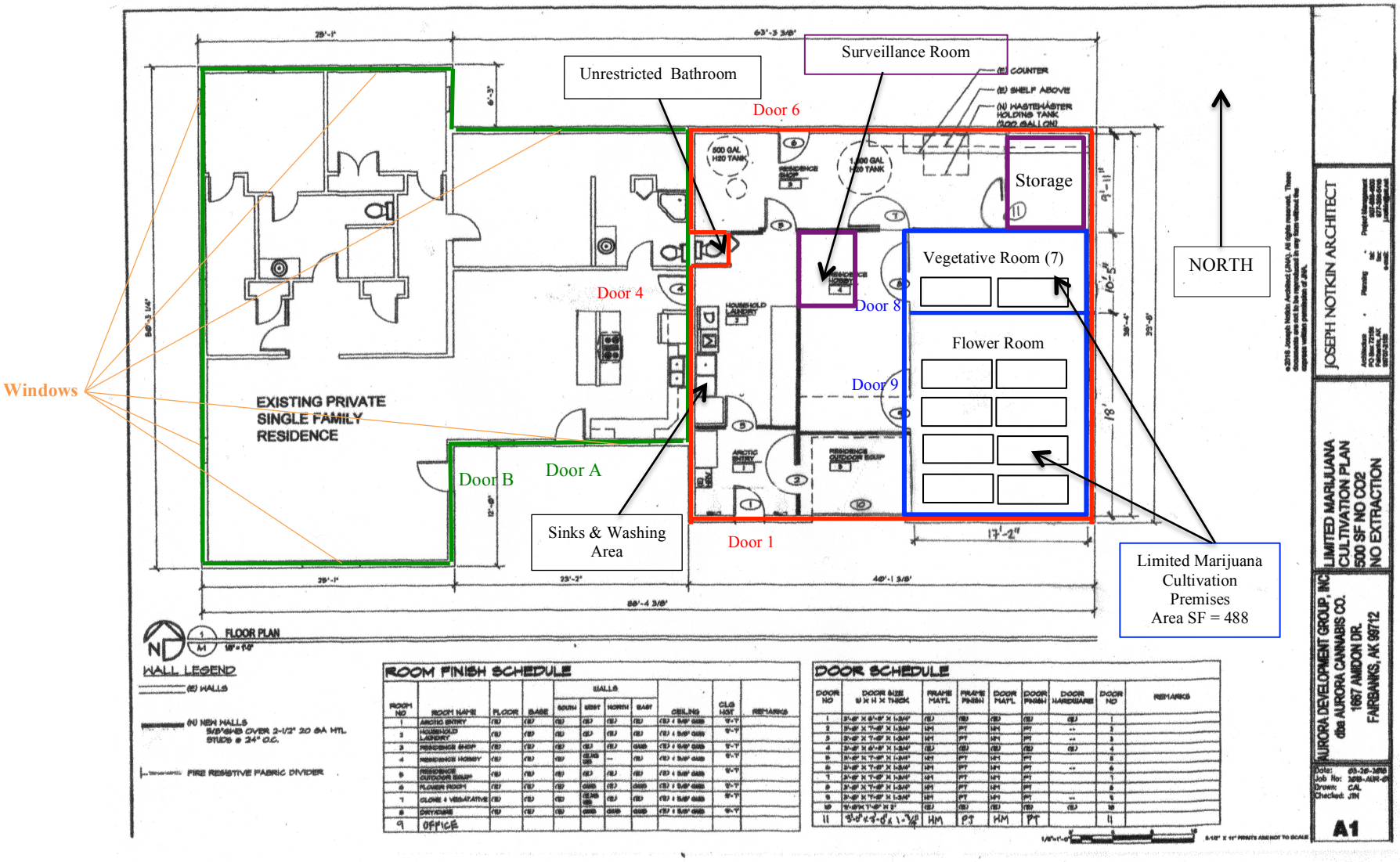

Red: Licensed Premises & Restricted Access Area
Blue: Cultivation Area = 488 SF
Purple: Surveillance Room and Storage Room; (locked & Secure Room authorize access only)
Green: Residential Area

Door 1,4,6: Entrances & Exits to Licensed Premises
Door 1: Primary Entrance & Exit to Licensed Premises
Door 4: Entrance & Exit between Licensed Premises and Residential Area
Door 8, 9: Entrances & Exits to Cultivation Area
Door A & B: Primary Entrances & Exits to Residential Area
Windows:

AMCO Received 4/1/2019

DIAGRAM 3
LICENSE #15557
AURORA DEVELOPMENT GROUP, INC

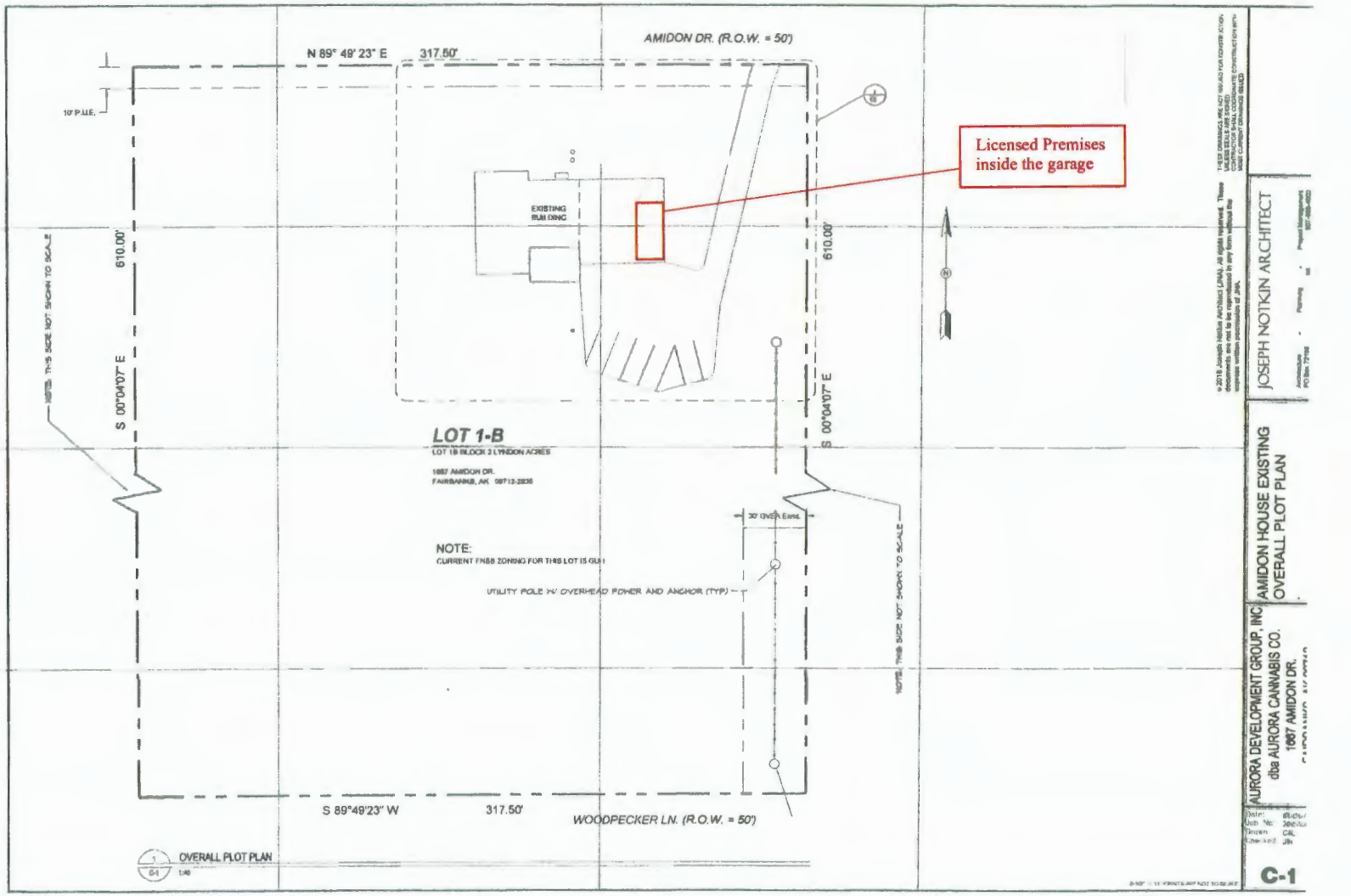

AMCO Received 3/19/2019

Aurora Development Group, Inc.

AMCO Received 3/19/2019

LOT 1-B, BLOCK 2
LYNDON ACRES SUBDIVISION

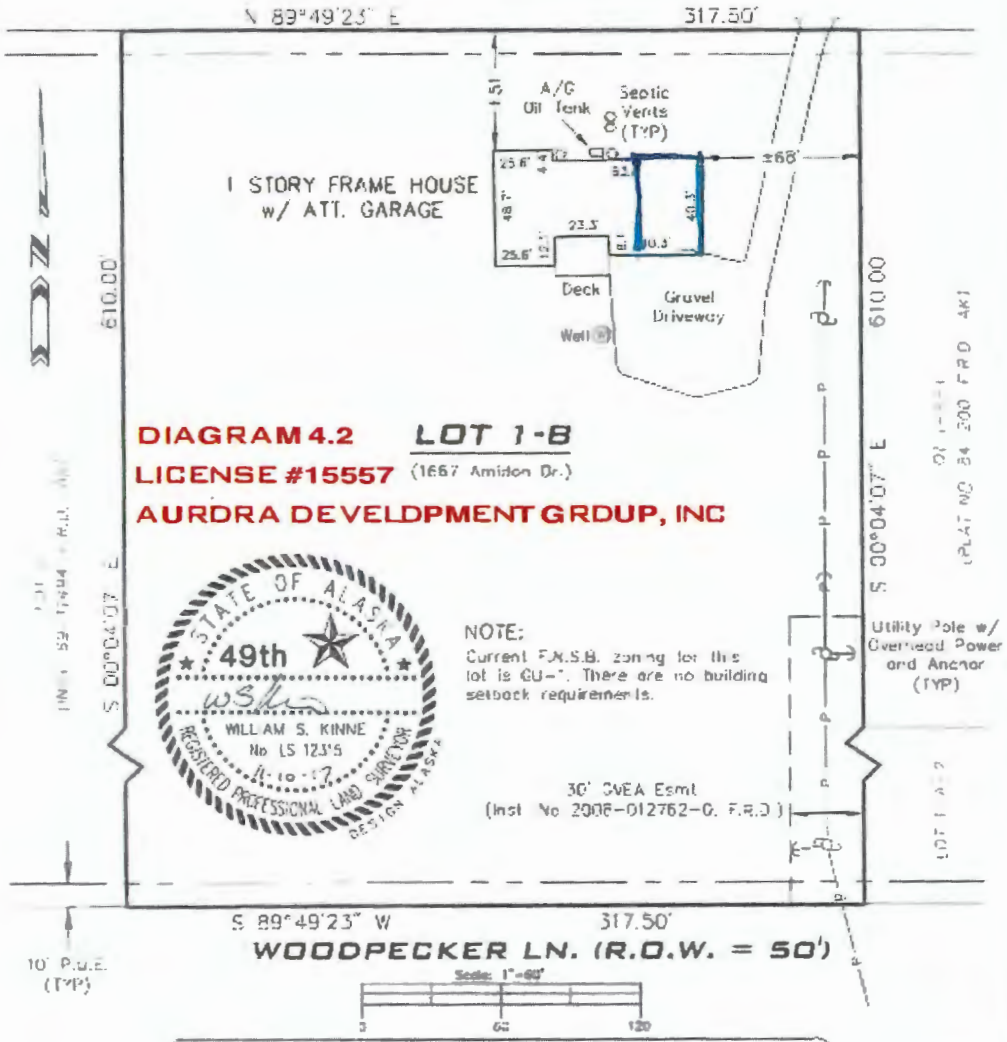

□ = licensed premises

MORTGAGE LOAN INSPECTION PLOT PLAN

7-089

LOT 1-B, BLOCK 2, LYNDON ACRES SUBDIVISION (Plat No. 76-101, F.R.D., AK)

MORTGAGEE: None

MORTGAGOR OR OWNER: Quentin Gehring

INSPECTED: 11-09-17
DRAWN: 11-09-17 BY: NJM
SCALE: 1" = 60'

CERTIFICATION STATEMENT

This inspection plot is made for and at the instance of Madden Real Estate.

I William S. Kinne, a Registered Land Surveyor in the State of Alaska, hereby certify to the above that I am familiar with the above described property and that the improvements located thereon lie wholly within the property lines and do not overlap onto the property lying adjacent thereto, that no improvements on the property lying adjacent thereto encroach upon the premises in question, and that there are no roadways, transmission lines or any other visible easements except as indicated hereon. I further certify that this mortgagee's inspection was prepared for identification purposes only for the mortgagee in connection with a new mortgage and is not intended or represented to be a land or property line survey; that no property corners were set; and is not to be used or relied upon for the establishment of any fence, building, or other improvement lines. This survey complies with the ASPLS Mortgage Inspection Survey Standards

Design Alaska

WILLIAM S. KINNE, Registered L[illegible]

601 College Road
Fairbanks, AK 99701
(907) 452-1241

Diagram 4.2

AMCO Received 3/19/2019