Alcohol and Marijuana Control Office
550 W 7th Avenue, Suite 1600
Anchorage, AK 99501
marijuana.licensing@alaska.gov
https://www.commerce.alaska.gov/web/amco
Phone: 907.269.0350

Alaska Marijuana Control Board

Form MJ-02: Premises Diagram

What is this form?

A detailed diagram of the proposed licensed premises is required for all marijuana establishment license applications, per 3 AAC 306.020(b)(8). **All areas designated as the licensed premises of a single license must be contiguous. All diagrams must have the licensed premises area labeled, and outlined or shaded as appropriate.**

What must be submitted with this form?

Applicants must attach multiple diagrams to this form, including (as applicable):

- **Diagram 1:**
  a diagram showing only the licensed premises areas that will be ready to be **operational at the time of your preliminary inspection** and license issuance;

- **Diagram 2:**
  if different than Diagram 1, a diagram outlining **all areas for which the licensee has legal right of possession** (a valid lease or deed), and clearly showing those areas' relationship to the current proposed licensed premises *(details of any planned expansion areas do not need to be included; a complete copy of Form MJ-14: Licensed Premises Diagram Change must be submitted and approved before any planned expansion area may be added to the licensed premises);*

- **Diagram 3:**
  a **site plan or as-built of the entire lot**, showing all structures on the property and clearly indicating which area(s) will be part of the licensed premises;

- **Diagram 4:**
  an **aerial photo of the entire lot and surrounding lots**, showing a view of the entire property and surrounding properties, and clearly indicating which area(s) will be part of the licensed premises *(this can be obtained from sources like Google Earth)*; and

- **Diagram 5:**
  a diagram of the **entire building in which the licensed premises is located**, clearly distinguishing the licensed premises from unlicensed areas and/or premises of other licenses within the building. If your proposed licensed premises is located within a building or building complex that contains multiple business and/or tenants, please provide the addresses and/or suite numbers of the other businesses and/or tenants *(a separate diagram is not required for an establishment that is designating the entire building as a single licensed premises)*.

This form, and all necessary diagrams that meet the requirements on Page 2 of this form, must be completed and submitted to AMCO's main office before any new or transfer license application will be considered complete.

Section 1 – Establishment Information

Enter information for the business seeking to be licensed, as identified on the license application.

Licensee:	FSE, Inc	**MJ License #:**		20829	
License Type:	Standard Marijuana Cultivation Facility				
Doing Business As:	GOOD TITRATIONS				
Premises Address:	506 Merhar Ave				
City:	Fairbanks	**State:**	Alaska	**ZIP:**	99701

License # 20829

AMCO Received 1/2/2020

Alaska Marijuana Control Board

Form MJ-02: Premises Diagram

Section 2 – Required Information

For your security, do not include locations of security cameras, motion detectors, panic buttons, and other security devices.
Items marked with a double asterisks (**) are only required for those retail marijuana establishments that are also applying for an onsite consumption endorsement.

The following details must be included in all diagrams:

- ☐ License number and DBA
- ☐ Legend or key
- ☐ Color coding
- ☐ Licensed Premises Area Labeled and Shaded, or Outlined as appropriate
- ☐ Dimensions
- ☐ Labels
- ☐ True north arrow

The following additional details must be included in Diagram 1:

- ☐ Surveillance room
- ☐ Restricted access areas
- ☐ Storage areas
- ☐ Entrances, exits, and windows
- ☐ Walls, partitions, and counters
- ☐ Any other areas that must be labeled for specific license or endorsement types
- ☐ ** Serving area(s)
- ☐ **Employee monitoring area(s)
- ☐ **Ventilation exhaust points, if applicable

The following additional details must be included in Diagram 2:

- ☐ Areas of ingress and egress
- ☐ Entrances and exits
- ☐ Walls and partitions

The following additional details must be included in Diagrams 3 and 4:

- ☐ Areas of ingress and egress
- ☐ Cross streets and points of reference

The following additional details must be included in Diagram 5:

- ☐ Areas of ingress and egress
- ☐ Entrances and exits
- ☐ Walls and partitions
- ☐ Cross streets and points of reference

AIMEE ROCUSH
My Commission
NOTARY PUBLIC
Expires 08-29-2023
STATE OF ALASKA

I declare under penalty of unsworn falsification that I have attached all necessary diagrams that meet the above requirements, and that this form, including all accompanying schedules, statements, and depictions is true, correct, and complete.

Signature of licensee

Shaun Tacke
Printed name of licensee

Aimee Rocush
Notary Public in and for the State of Alaska

My commission expires: 8/29/2023

Subscribed and sworn to before me this 20 day of December, 2019.

AMCO Received 1/2/2020

Diagrams 1, 2 & 5

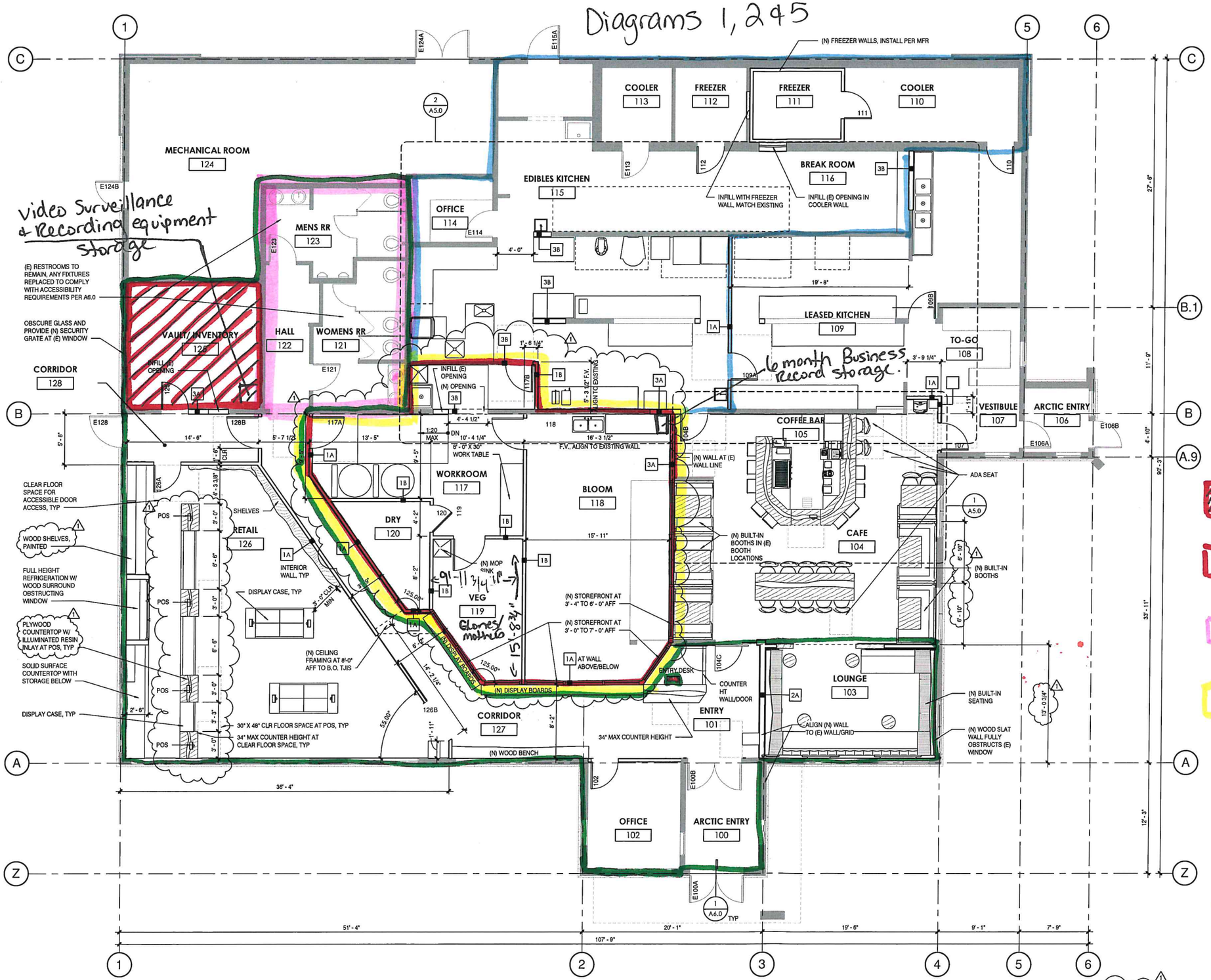

1 A2.0 GROUND FLOOR PLAN
SCALE: 3/16" = 1'-0"

SHEET NOTES (PLANS)

1. DIMENSIONS ARE TO FACE OF STUD, FACE OF CONCRETE, GRID LINES, AND CENTER LINE OF WINDOW ASSEMBLIES UNLESS OTHERWISE NOTED.
2. CONSTRUCTION ASSEMBLY DESCRIPTIONS, SEE A1.0.
3. PRODUCT SPECIFICATIONS, SEE A1.0.
4. ACCESSIBILITY AND ADA DETAILS, SEE A6.0.
5. OPERABLE PARTS OF LIGHTING, ENVIRONMENTAL, SECURITY CONTROLS AND ELECTRICAL RECEPTACLES SHALL BE MOUNTED BETWEEN 15" AND 48" ABOVE FINISHED FLOOR.
6. ALL FAUCETS TO HAVE LEVER HANDLES.
7. REMOVE EXISTING TILE, GRIND AND POLISH EXISTING CONCRETE, TYP THROUGHOUT. IF ANY TILE REMAINS OR IS REPLACED DURING CONSTRUCTION, VERIFY ADA COMPLIANCE AT FLOOR TRANSITION PER 2/A6.0.

PHASING LEGEND

- EXISTING TO REMAIN
- REMOVED DURING DEMO PHASE (DEMO PLANS ONLY)
- NEW CONSTRUCTION (NEW PLANS ONLY)

- Shared
- Restricted Access AREA
- Non-Restricted Shared Restroom
- proposed Licensed Premises
- Visitor ID check Area
- Retail License #20827
- Manufacturing License #20832

HARKA - LOW-CARBON ARCHITECTURE & LIFE
HARKA
107 SE WASHINGTON STREET, SUITE 740
PORTLAND, OR 97214 - HARKAHQ.COM

PERMIT SET REVISIONS (REFERENCE ONLY)

AMCO Received 2/27/2020

Good Titrations
License # 20829
506 Merhar Avenue
Fairbanks, AK
Cultivation

#	Date	Description
1		

10.14.19
Date

SM
Drawn By

Floor Plan

A2.0

Copyright 2019 ©
If this drawing is less than 22" x 34", it has been reduced. Scale accordingly. Half size at 11" x

Plot Date:10/14/2019 9:39:32 PM Revit File:F:\My Drive\1-HARKA - PROJECT Files\Good Titrations\Dispensary\Revit\Good Titrations_Interiors_19.10.12.rvt

GOOD TITRATIONS

Diagram 3

GENERAL NOTES

1. CONTRACTOR SHALL VERIFY ALL EXISTING CONDITIONS AND DIMENSIONS PRIOR TO CONSTRUCTION AND SHALL NOTIFY DESIGNER OF ANY DEVIATIONS FROM DRAWINGS PRIOR TO CONTINUATION OF WORK.
2. CONTRACTOR SHALL NOTIFY DESIGNER OF ANY NEED FOR DESIGN CHANGES DUE TO FIELD CONDITIONS OR OBSERVATIONS PRIOR TO CONTINUING WORK.
3. WRITTEN DIMENSIONS HAVE PRECEDENCE OVER SCALED DIMENSIONS. DO NOT SCALE THE DRAWINGS.
4. DIMENSIONS ARE TO FACE OF STUD, FACE OF CONCRETE, GRID LINES, AND CENTER LINE OF WINDOW ASSEMBLIES UNLESS OTHERWISE NOTED.
5. SAFETY GLAZING IS REQUIRED WHERE GLASS IS WITHIN 18" OF THE FLOOR AND 24" OF DOORS. SEE 2017 ORSC SEC. R308 FOR ADDITIONAL SAFETY REQUIREMENTS.
6. ALL MATERIALS AND WORK SHALL CONFORM TO ALL GOVERNING CODES AND REGULATIONS.
7. ALL WORK TO BE DONE IN ACCORDANCE WITH THE LATEST CODES WITH LOCAL AMENDMENTS AND ORDINANCES AND GOOD STANDARD PRACTICE. CONTRACTOR TO COORDINATE ALL DIMENSIONS, SIZING AND OPENINGS WITH ALL TRADES. CONTRACTOR TO VERIFY ALL CONNECTOR SIZES TO INSURE PROPER FIT.
8. ALL MATERIALS AND PRODUCTS SHALL BE INSTALLED IN ACCORDANCE WITH THE MANUFACTURER'S WRITTEN INSTRUCTIONS.
9. FRAMING CONTRACTOR TO VERIFY ALL ROUGH OPENING SIZES AND DETAILS FOR DOORS, WINDOWS, EXHAUST, FANS, AND VENTS.
10. CONTRACTOR SHALL PROVIDE ALL NECESSARY TEMPORARY BRACING, SHORING, GUYING OR OTHER MEANS TO AVOID EXCESSIVE STRESSES AND TO HOLD STRUCTURAL ELEMENTS IN PLACE DURING CONSTRUCTION.
11. ARCHITECT NOT RESPONSIBLE FOR WATER PENETRATION OF EXISTING ROOFING, FLASHING, OR PARAPETS.
12. WHEN WORK NOT SPECIFICALLY CALLED OUT IS REQUIRED TO COMPLETE THE PROJECT, IT SHALL BE OF THE BEST MATERIAL AND WORKMANSHIIP.
13. CONTRACTOR SHALL TAKE ALL THE NECESSARY PRECAUTIONARY MEASURES TO PROTECT THE PUBLIC AND ADJACENT PROPERTIES FROM DAMAGE THROUGHOUT CONSTRUCTION. CONTRACTOR ASSUMES ALL LIABILITY FOR DAMAGES INCURRED DURING CONSTRUCTION.
14. CONTRACTOR SHALL ESTABLISH AND VERIFY ALL OPENINGS AND INSERTS FOR MECHANICAL, ELECTRICAL, AND PLUMBING WITH APPROPRIATE TRADES.
15. THE STARTING OF WORK BY THE GENERAL CONTRACTOR OR ANY SUBCONTRACTOR SHALL BE CONSIDERED PRIMA FACIE EVIDENCE THAT THEY HAVE INSPECTED AND ACCEPTED ALL CONDITIONS INVOLVED IN THE WORK AND FIND THEM SATISFACTORY.
16. CONTRACTOR SHALL TIE NEW UTILITIES INTO PRIVATE & PUBLIC LINES AS REQUIRED BY PUBLIC, PRIVATE UTILITIES OR COUNTY.
17. CONTRACTOR SHALL COORDINATE WORK OF MECH. AND ELEC. SUBCONTRACTORS AND NOTIFY DESIGNER OF ANY CONFLICTS OR VARIATIONS FROM I.R.C. REQUIREMENTS. ALL WORK TO CONFORM TO ALL RELEVANT CODES AND REGULATIONS.
18. CONTRACTOR SHALL BE RESPONSIBLE FOR OBTAINING ALL DEFERRED AND TRADE PERMITS.
19. CONTRACTOR SHALL VERIFY AND CONFIRM ALL SIZES & DIMENSIONS PRIOR TO ORDERING.
20. WHEN POSSIBLE, USE PRODUCTS MADE IN THE UNITED STATES. EXAMPLE OF A COMPREHENSIVE LIST OF PRODUCTS MADE IN THE USA CAN BE FOUND AT: http://www.americansworking.com/buildingmaterial.html

LOW-CARBON NOTES

1. ANNULAR SPACES AROUND PIPES, ELECTRIC CABLES, CONDUITS OR OTHER OPENINGS IN PLATES AT EXTERIOR WALLS SHALL BE PROTECTED AGAINST THE PASSAGE OF RODENTS BY CLOSING SUCH OPENINGS WITH CEMENT MORTAR, CONCRETE MASONRY OR SIMILAR ACCEPTABLE METHOD.
2. A MINIMUM OF 50 PERCENT OF THE CONSTRUCTION WASTE GENERATED AT THE SITE SHALL BE DIVERTED TO RECYCLE OR SALVAGE.
3. GAS FIREPLACES SHALL BE A DIRECT-VENT SEALED-COMBUSTION TYPE. WOOD/PELLET STOVES SHALL COMPLY WITH US EPA PHASE II EMISSION LIMITS.
4. DUCT AND VENT OPENINGS SHALL BE COVERED DURING CONSTRUCTION.
5. ADHESIVES, SEALANTS AND CAULKS SHALL BE COMPLIANT LOW OR NO VOC.
6. PAINTS, STAINS, AND OTHER COATINGS SHALL BE COMPLIANT LOW OR NO VOC.
7. MOISTURE CONTENT OF BUILDING MATERIALS USED IN ENCLOSED WALL AND FLOOR FRAMING IS CHECKED BEFORE ENCLOSURE AND CANNOT EXCEED 19%.
8. HVAC SYSTEM INSTALLERS ARE TRAINED AND CERTIFIED IN THE PROPER INSTALLATION OF HVAC SYSTEMS.
9. USE FSC, LOCAL, ENVIRONMENTALLY CERTIFIED, SUSTAINABLY-SOURCED PRODUCTS - FOR MORE INFORMATION AND RESOURCES VISIT SUSTAINABLE NW: http://www.sustainablenorthwest.org/
10. MINIMIZE USE OF CONCRETE WHERE ALTERNATIVE IS POSSIBLE.

SYMBOLS

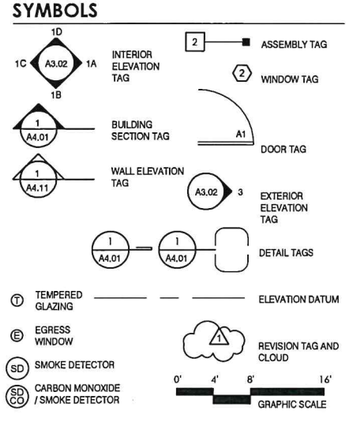

ZONING INFORMATION

	CODE	PROPOSED
MAX HEIGHT (INDOOR SMALL MARIJUANA CULTIVATION FACILITY)	35'-0" MAX	< 35'-0"
REQUIRED YARDS	NOT REQ'D	NO CHANGES
MAX HEIGHT	UNLIMITED	NO CHANGES
MAX LOT COVERAGE	100%	NO CHANGES
SMALL INDOOR CULTIVATION	PERMITTED	ACCESSORY USE

PARKING

RESTAURANT: 1 SPACE PER 3 SEATS: 47 SEATS / 3 = 16 SPACES
STORE: 1 SPACE PER 200 SF SALES AREA: 837 SF / 200 = 4 SPACES
ALL OTHER COMMERCIAL/INDUSTRIAL: 3 SPACES PER 4 EMPLOYEES:
(22 EMPLOYEES / 4) X 3 = 17 SPACES
ADA PARKING: 1 ADA STALL PER 50 SPACES

37 SPACES REQUIRED

STORMWATER MANAGEMENT

NO CHANGES TO IMPERVIOUS AREA.

BUILDING INFORMATION

	EXISTING	PROPOSED
TOTAL	7,800 SF	7,800 SF (NO CHANGES)

AREA OF MARIJUANA CULTIVATION FACILITY: 1,042 SF, ALL INDOOR

SITE INFORMATION

ADDRESS	506 MERHAR AVE, FAIRBANKS, AK 99701
COUNTY	FAIRBANKS NORTH STAR
LEGAL DESCRIPTION	LOT 3, TR A, BENTLEY BROTHERS SUBDIVISION
LOT SIZE	.99 ACRES (41,782 sf)
BASE ZONE	GU-1 (GENERAL USE)

VICINITY MAP

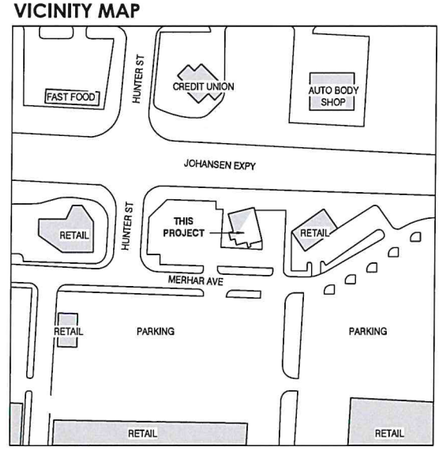

JOB DESCRIPTION

TENANT IMPROVEMENT OF EXISTING A-2 RESTAURANT TO NON-SEPARATED MIXED OCCUPANCY A-2 CAFE AND KITCHEN, M MARIJUANA RETAIL AND F-1 SMALL INDOOR MARIJUANA CULTIVATION. NO CHANGES TO EXTERIOR ENVELOPE.

TO COMPLY WITH 2015 INTERNATIONAL BUILDING CODE AND CITY OF FAIRBANKS LOCAL AMENDMENTS TO THE 2015 INTERNATIONAL BUILDING CODE.

VALUATION: $130,000

TRADE PERMITS

MECHANICAL, ELECTRICAL, PLUMBING, FIRE SPRINKLER AND SIGN PERMITS TO BE OBTAINED SEPARATELY.

PROJECT TEAM

OWNER

HAPPY PEPPER, LLC
1770 DONALD AVE
FAIRBANKS AK 99701
907-328-8529
info@goodtitrations.com

ARCHITECT

HARKA ARCHITECTURE, LLC
107 SE WASHINGTON ST, SUITE 740
PORTLAND, OR 97214
CONTACT: PATRICK DONALDSON
503-975-9471
patrick@harkahq.com

STRUCTURAL

NELSON ENGINEERING
155 BIDARKA STREET
KENAI, ALASKA 99611
CONTACT: ZACK RININGER
907-283-3583
ZRININGER@ALASKA.NET

DRAWING SHEET INDEX

ARCHITECTURAL

A0.0	Project Info, Zoning / Code, & Site Plan
A0.1	Life Safety Info & Plans
A1.0	Assemblies, Schedules & Demo Plan
A2.0	Floor Plan
A2.1	Reflecting Ceiling Plan
A3.0	Elevations
A5.0	Enlarged Plans
A5.1	Sections & Details
A6.0	Accessibility Details

INTERIOR DESIGN

ID1.0	Finish / Material Schedules & Reference Plan
ID2.0	Fixture / Furniture Plan
ID3.0	Lighting Plan
ID4.0	Interior Elevations
ID4.1	Interior Elevations
ID5.0	Interior Details
ID5.1	Interior Details
ID5.2	Interior Details

STRUCTURAL

S1.1	Notes and Specifications
S1.2	Special Inspection
S2.1	First Floor Framing Plan
S3.1	Details

D - Proposed Licensed Facility

- Right to possession.

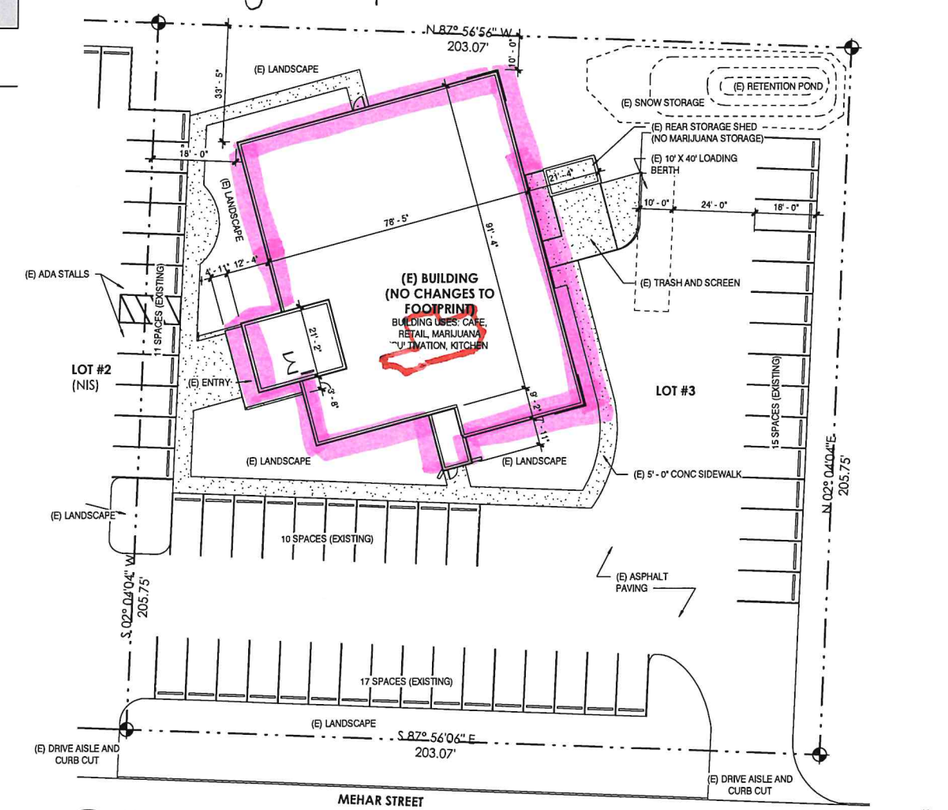

1 A0.0 SITE PLAN
SCALE: 3/64" = 1'-0"

HARKA · LOW-CARBON ARCHITECTURE & LIFE
HARKA
107 SE WASHINGTON STREET, SUITE 740
PORTLAND, OR 97214 - HARKAHQ.COM

PERMIT SET REVISIONS (REFERENCE ONLY)

AMCO Received 2/24/2020

Good Titrations
License # 60839
506 Merhar Avenue
Fairbanks, AK

#	Date	Description
1		

09.09.19
Date

SM
Drawn By

Project Info, Zoning / Code, & Site Plan

A0.0

Copyright 2019 ©

If this drawing is less than 22" x 34", it has been reduced. Scale accordingly. Half size at 11" x 17".

Plot Date:10/14/2019 6:02:12 PM Revit File:D:\Google Drive\HARKA - PROJECT Files\Good Titrations\Dispensary\Revit\Good Titrations_Interiors_19.10.12.rvt

ABBREVIATIONS

#	NUMBER
&	AND
℄	CENTERLINE
A/C	AIR CONDITIONING
ADD'L	ADDITIONAL
ADJ	ADJUSTABLE
ADU	ACCESSORY DWELLING UNIT
AFF	ABOVE FINISH FLOOR
ALUM	ALUMINUM
ALT	ALTERNATE
APT	APARTMENT
ARCH	ARCHITECT(URAL)
AWN	AWNING
BD	BOARD
BR	BEDROOM
BDRM	BEDROOM
BLDG	BUILDING
BLKG	BLOCKING
BLW	BELOW
BM	BEAM
BO(B.O.	BOTTOM OF
BOT	BOTTOM
BSMT	BASEMENT
CLG	CEILING
CLR	CLEAR(ANCE)
CMU	CONCRETE UNIT MASONRY
CPT	CARPET
COL	COLUMN
COLS	COLUMNS
CONT	CONTINUOUS
CONC	CONCRETE
CORR	CORRIDOR
D	DRYER
DBL	DOUBLE
DIA	DIAMETER
DIM	DIMENSION
DN	DOWN
DR	DOOR
DS	DOWNSPOUT
DW	DISHWASHER
DWG	DRAWING
EA	EACH
EJ	EXPANSION JOINT
EL	ELEVATION
ELEC	ELECTRICAL
ELEV	ELEVATION ELEVATOR
EQUIP	EQUIPMENT
EQ	EQUAL
(E)	EXISTING
EXIST	EXISTING
EXT	EXTERIOR
FCB	FIBER CEMENT BOARD
FD	FLOOR DRAIN
FEC	FIRE EXTINGUISHER CABINET
FIN	FINISH
FLR	FLOOR
FND	FOUNDATION
FOF	FACE OF FINISH
FOS	FACE OF STUD
FOW	FACE OF WALL
FRM	FRAMING
FT	FEET
FTG	FOOTING
FV	FIELD VERIFY
GA	GAUGE, GYPSUM ASSOCIATION
GAL	GALVANIZED
GB	GRAB BAR
GWB	GYPSUM WALL BOARD
HB	HOSE BIB
HDR	HEADER
HDW	HARDWARE
HM	HOLLOW METAL
HORIZ	HORIZONTAL
HR	HOUR
HVAC	HEATING VENTILATION AND AIR CONDITIONING
IBC	INTERNATIONAL BUILDING CODE
IN	INCH
INFO	INFORMATION
INSUL	INSULATE(D)
INT	INTERIOR
JAN	JANITOR'S CLOSET
JST	JOIST
KIT	KITCHEN
LAM	LAMINATE
LAV	LAVATORY
LAUN	LAUNDRY
LGT	LIGHT
LIN	LINOLEUM
MAINT	MAINTENANCE
MATL	MATERIAL
MAX	MAXIMUM
MECH	MECHANICAL
MEMB	MEMBRANE
MFR	MANUFACTURER
MIN	MINIMUM
MIRR	MIRRORED
MISC	MISCELLANEOUS
MO	MASONRY OPENING
MTL	METAL
(N)	NEW
N	NORTH
NA	NOT APPLICABLE
NIS	NOT IN SCOPE
NO	NUMBER
NR	NON RATED
NTS	NOT TO SCALE
OC/O.C.	ON CENTER
OCC	OCCUPANT(S) OCCUPANCY(IES)
OLF	OCCUPANT LOAD FACTOR
OPP	OPPOSITE
ORD	OVERFLOW ROOF DRAIN
PERF	PERFORATED, PERFORATE
PLAM	PLASTIC LAMINATE
PL	PLATE, PROPERTY LINE
PLYWD	PLYWOOD
PNL	PANEL
PNT	PAINT
PR	PAIR
PRE-FIN	PREFINISHED
PRE-PR	PRE-PRIMED
PT	PRESSURE TREATED
R	RADIUS
RD	ROOF DRAIN
REF	REFERENCE
REFR	REFRIGERATOR
REQ'D	REQUIRED
REST	RESTROOM
REV	REVISION REVERSE
RM	ROOM
RO	ROUGH OPENING
SD	SMOKE DETECTOR
SF	SQUARE FOOT
SHTHG	SHEATHING
SIM	SIMILAR
SPEC	SPECIFICATION
SS	STAINLESS STEEL
STD	STANDARD
STL	STEEL
STOR	STORAGE
STC	SOUND TRANSMISSION CLASS
STRUCT	STRUCTURAL
T & G	TONGUE & GROOVE
TB	TOWEL BAR
THK	THICK, THICKNESS
TO/T.O.	TOP OF
TP	TOILET PAPER
TYP	TYPICAL
UL	UNDERWRITERS LABORATORY
UNO	UNLESS NOTED OTHERWISE
VERT	VERTICAL
VS	VERSUS
W	WASHER
WC	WATER CLOSET
WD	WOOD
WH	WATER HEATER
WIN	WINDOW
WRB	WEATHER RESISTIVE BARRIER
WP	WATERPROOF
WR	WATER RESISTANT

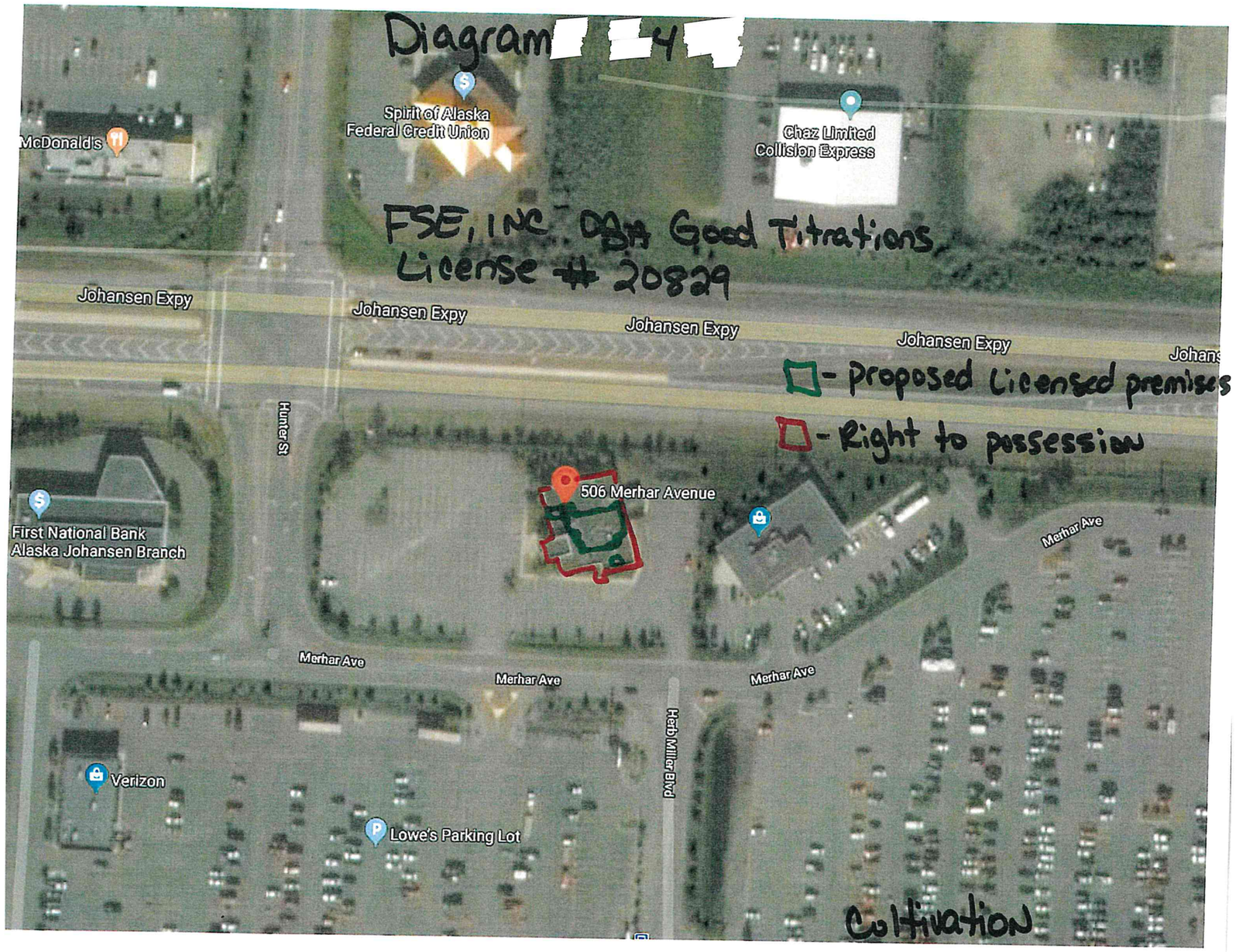

AMCO Received 2/24/2020