Alcohol and Marijuana Control Office
550 W 7th Avenue, Suite 1600
Anchorage, AK 99501
marijuana.licensing@alaska.gov
https://www.commerce.alaska.gov/web/amco
Phone: 907.269.0350

Alaska Marijuana Control Board

Form MJ-14: Licensed Premises Diagram Change

What is this form?

This licensed premises diagram change form is required for all marijuana establishment licensees seeking to alter the functional floor plan or reduce or expand the area of the establishment's existing licensed premises.
The required $250 change fee may be made by check, cashier's check, or money order.

This form must be completed and submitted to AMCO's main office prior to altering the existing floor plan, and along with an initiated application for an Onsite Consumption Endorsement if applicable. The licensed premises may not be altered unless and until the application has been approved by the board.

Section 1 – Establishment Information

Enter information for the business seeking to be licensed, as identified on the license application.

Licensee:	DHC, LLC.	**MJ License #:**	14706		
License Type:	Limited Marijuana Cultivation Facility				
Doing Business As:	DENALI HERB COMPANY				
Premises Address:	1328 E. Fairview Loop Road, Suite A				
City:	Wasilla	**State:**	Alaska	**ZIP:**	99654

Section 2 – Required Information

For your security, do not include locations of security cameras, motion detectors, panic buttons, and other security devices.

The following details must be included:

- [X] **License number and DBA**
- [X] **Legend or key**
- [X] **Color coding**
- [X] **Dimensions**
- [X] **Labels**
- [X] **True north arrow**
- [X] **Surveillance room**
- [X] **Licensed premises boundary**
- [X] **Restricted access areas**
- [X] **Storage areas**
- [X] **Entrances, exits, and windows**
- [X] **Walls, partitions, and counters**
- [X] **Any other areas that must be labeled for specific license types**
- [ ] **Serving area****
- [ ] **Employee monitoring area****
- [ ] **Ventilation exhaust points, if applicable****

Items marked with a double asterisks (**) are only required for those retail marijuana establishments that are submitting the MJ-14 form in conjunction with an onsite consumption endorsement application.

Alaska Marijuana Control Board

Form MJ-14: Licensed Premises Diagram Change

Section 3 – Summary of Changes

Provide a summary of the changes for which you are requesting approval.

The original plans for this license included two limited cultivations within one premises, and were approved by the MCB in early 2018. Since that time, regulation changes have preempted the originally approved plans from being executed as initially planned and approved. As such, significant changes to use of space within the facility have resulted in necessity to execute a premises diagram change. Updated plans/ as built has already been approved by the Mat-Su Borough during the plan review process, post board approval. An entirely new MJ02 Packet with all diagrams has been produced to meet AMCO requirements, based upon the MSB approved as-built, and reflecting the final layout, use, and dimensions of this facility.

Section 4 – Declarations

Read each statement below, and then sign your initials in the corresponding box to the right [If applicable]:	Initials
If a local building permit is required, I have attached a copy of it to this form.	
The proposed changes conform to all applicable public health, fire, and safety laws.	
I have included a title, lease or other documentation showing sole right of possession to the additional area(s) if the additional area(s) are not already part of my approved licensed premises.	

As a marijuana establishment licensee, I declare under penalty of unsworn falsification that this form, including all accompanying schedules and statements, is true, correct, and complete.

Signature of licensee

Gregory L Stigen

Printed name of licensee

ANCE C. WILLS NOTARY PUBLIC STATE OF ALASKA

Notary Public in and for the State of Alaska.

My commission expires: 6.18.21

Subscribed and sworn to before me this 2 day of July, 20 20.

Alaska Marijuana Control Board

Form MJ-14: Licensed Premises Diagram Change

Section 5 – Approvals

Local Government Review is required to be completed before submission to the Alcohol and Marijuana Control Office.

Local Government Review (to be completed by an appropriate local government official):	Yes	No	Pending
The proposed changes shown on this form conform to all local restrictions and laws.	X		
A local building permit is required for the proposed changes.		X	

Digitally signed by Mark Whisenhunt
Date: 2020.07.06 15:29:52 -08'00'

Signature of local government official | Building Permit # | Date: July 6, 2020

Mark Whisenhunt | Planner

Printed name of local government official | Title

* See attached figures showing area under cultivation is less than 500sf.

Section 6 – AMCO Review

AMCO Review:		Approved	Disapproved
Signature of AMCO Enforcement Supervisor	Signature of Director	☑	☐
James Hoelscher 10/12/2020	Glen Klinkhart by Jane Sanyer	10·12·2020	
Printed name of AMCO Enforcement Supervisor	Printed name of Director	Date	

AMCO Comments:

DENALI HERB COMPANY
LIC #14706
MJ-01 QUESTION 4.1 (continued)

Maximum of 490.02 sq. feet under canopy shall be utilized in cultivation at any time:

ROOM 1 MAXIMUM CANOPY = 75.51 sq. ft.
ROOM 2 MAXIMUM CANOPY = 72. sq. ft.
ROOM 3 TOTAL CANOPY = 119 sq. ft.
ROOM 4 TOTAL CANOPY = + 227.51 sq. ft
TOTAL MAXIMUM CANOPY = 490.02 sq. ft.

ROOM 1:

- plants on casters plus an additional 16" x 52" shelf/rack; minus door swing/ room entry space

11'10" x 7'7" room dimensions = 89.73 sq. ft.
+ 16" x 52" additional shelf = 5.78 sq. ft.
Room 1 subtotal = 95.51 sq. ft.
- (4' x 5') (doorswing/access) – (20 sq. ft.)
ROOM 1 TOTAL CANOPY = 75.51 sq. ft.

Room 2:

- plants on 3 tables in one of two variable arrangements

EITHER: "Horse shoe" Arrangement = 1 table @ 3' x 3' = 9 sq. ft.
+ 2 tables @ 3' x 8'= 48 sq ft.
"Horse shoe" Arrangement" = 57 sq. ft.

OR: "Full sea" Arrangement = 3 tables @ 3' x 8' = 72 sq. ft.

ROOM 2 MAXIMUM CANOPY = 72 sq. ft.

Room 3:

- plants to be on casters and rotated throughout room

12' x 11'7" overall room dimensions = 139 sq. ft.
- (4' x 5') (doorswing/access) – (20 sq. ft.)
ROOM 3 TOTAL CANOPY = 119 sq. ft.

Room 4:

- plants to be on casters and rotated throughout room

20'11 x 11'10" overall room dimensions = 247.51 sq. ft.
- (4' x 5') (doorswing/access) – (20 sq. ft.)
ROOM 4 TOTAL CANOPY = 227.51 sq. ft.

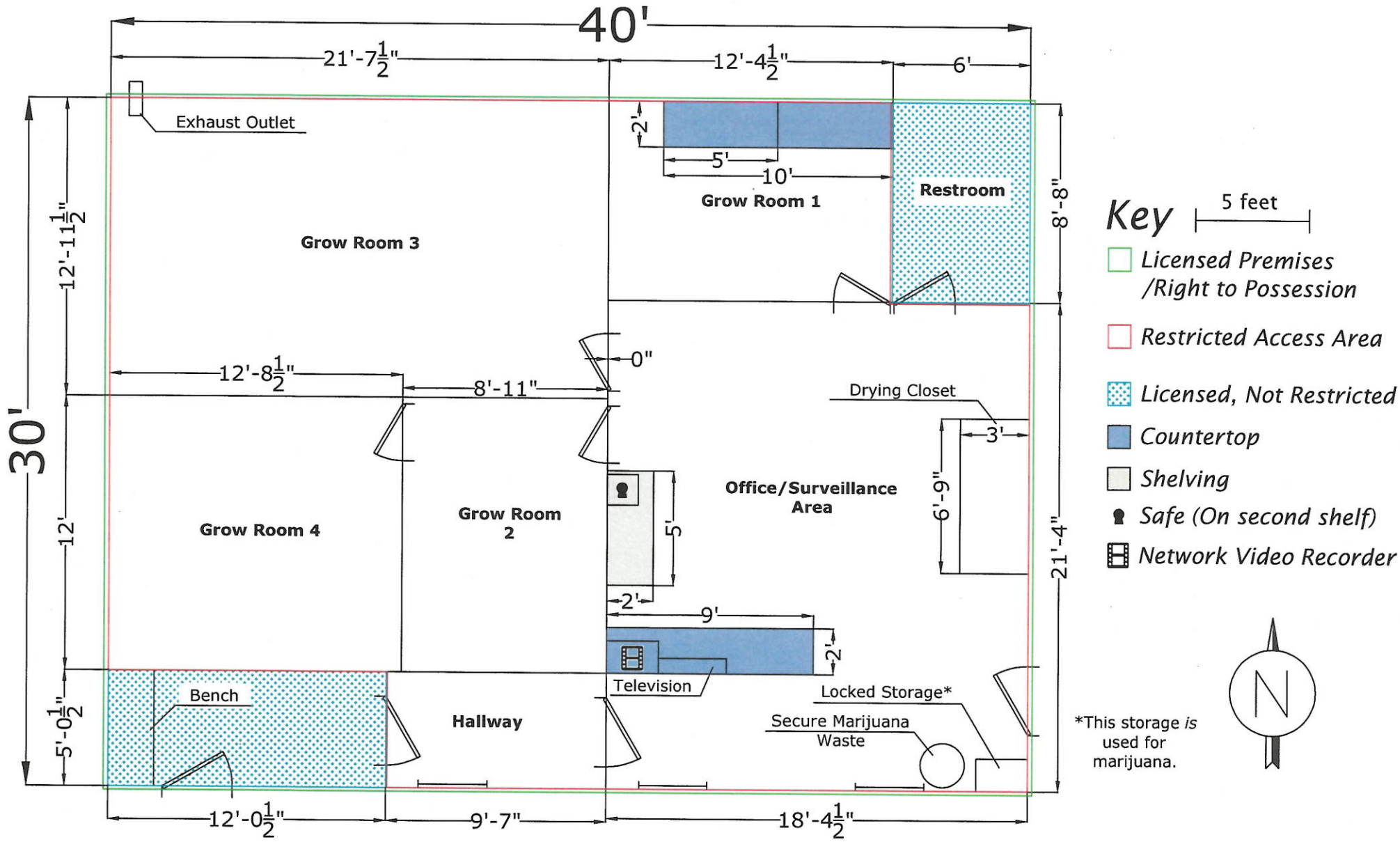

Denali Herb Company - LIC#14706
MJ-02 Diagram 1, 2, 5a

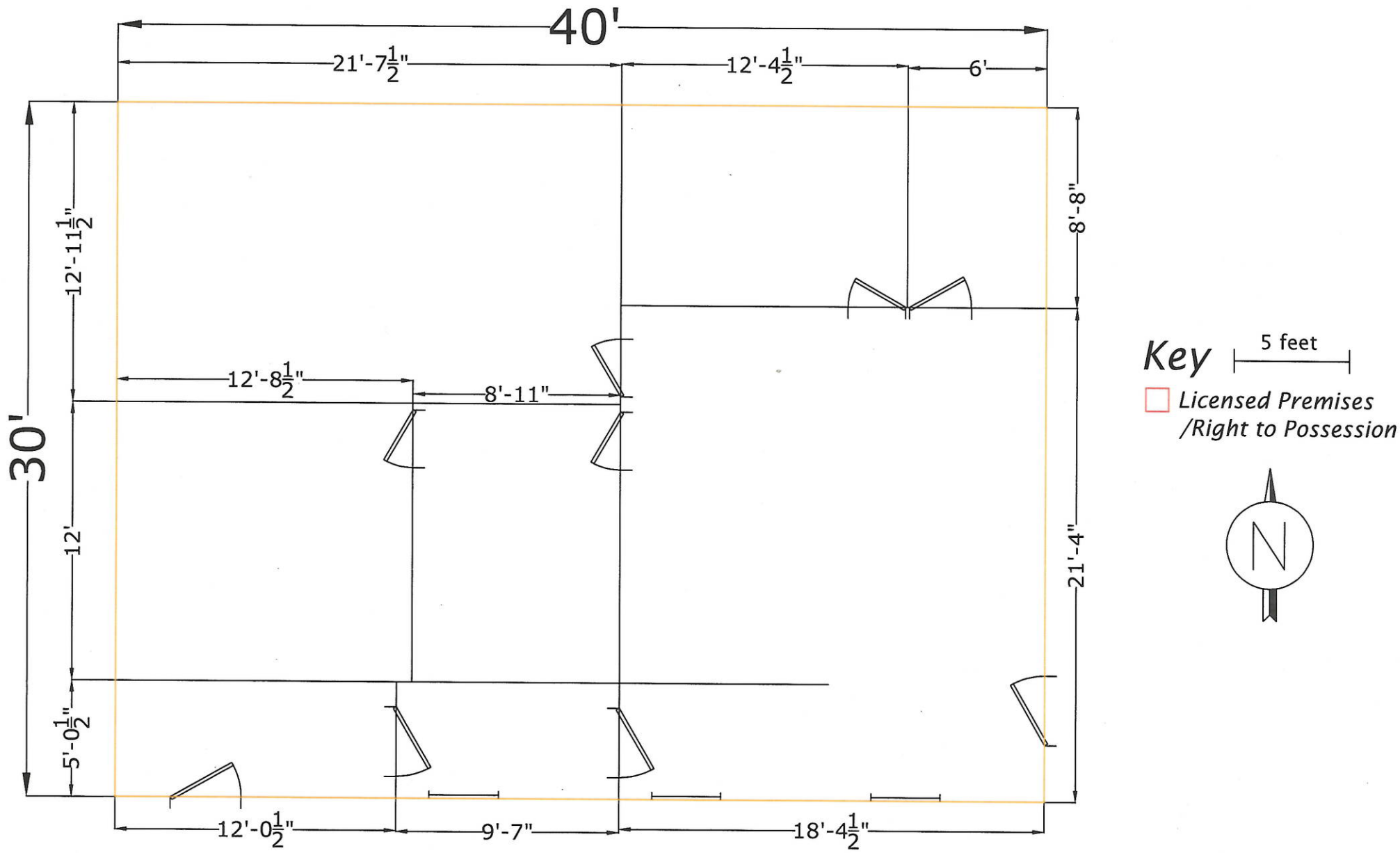

Denali Herb Company - LIC#14706
MJ-02 Diagram 3a

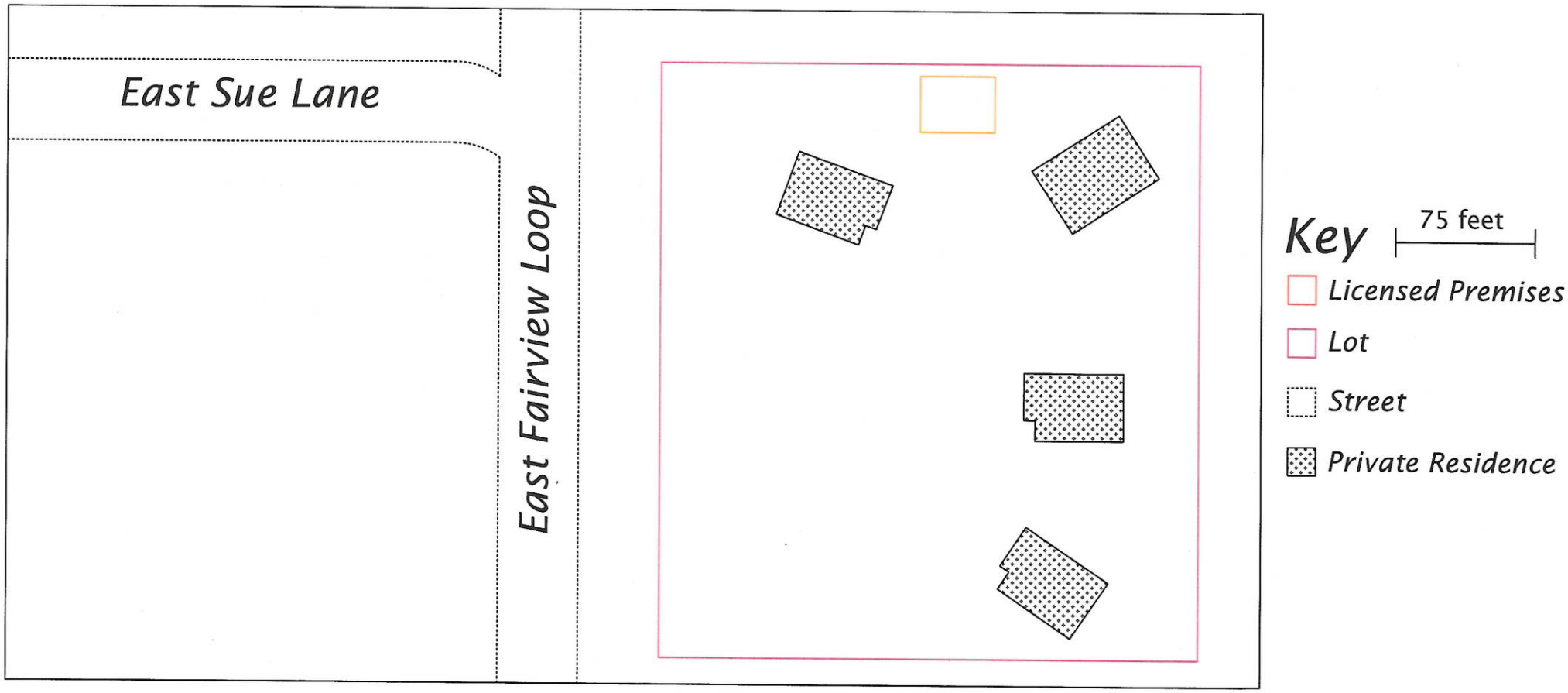

Denali Herb Company - LIC#14706
MJ-02 Diagram 3b, 5b

E SUE LN
E FAIRVIEW LOOP
Denali Herb Company - LIC#14706
MJ-02 Diagram 4
Legend
0
50
100ft
Lot Lines
Licensed Premises
Private Residences
N