Alcohol and Marijuana Control Office
550 W 7th Avenue, Suite 1600
Anchorage, AK 99501
marijuana.licensing@alaska.gov
https://www.commerce.alaska.gov/web/amco
Phone: 907.269.0350

Alaska Marijuana Control Board

Form MJ-02: Premises Diagram

What is this form?

A detailed diagram of the proposed licensed premises is required for all marijuana establishment license applications, per 3 AAC 306.020(b)(8). **All areas designated as the licensed premises of a single license must be contiguous. All diagrams must have the licensed premises area labeled, and outlined or shaded as appropriate.**

What must be submitted with this form?

Applicants must attach multiple diagrams to this form, including (as applicable):

- **Diagram 1:**
  a diagram showing only the licensed premises areas that will be ready to be **operational at the time of your preliminary inspection** and license issuance;

- **Diagram 2:**
  if different than Diagram 1, a diagram outlining **all areas for which the licensee has legal right of possession** (a valid lease or deed), and clearly showing those areas' relationship to the current proposed licensed premises *(details of any planned expansion areas do not need to be included; a complete copy of Form MJ-14: Licensed Premises Diagram Change must be submitted and approved before any planned expansion area may be added to the licensed premises);*

- **Diagram 3:**
  a **site plan or as-built of the entire lot**, showing all structures on the property and clearly indicating which area(s) will be part of the licensed premises;

- **Diagram 4:**
  an **aerial photo of the entire lot and surrounding lots**, showing a view of the entire property and surrounding properties, and clearly indicating which area(s) will be part of the licensed premises *(this can be obtained from sources like Google Earth)*; and

- **Diagram 5:**
  a diagram of the **entire building in which the licensed premises is located**, clearly distinguishing the licensed premises from unlicensed areas and/or premises of other licenses within the building. If your proposed licensed premises is located within a building or building complex that contains multiple business and/or tenants, please provide the addresses and/or suite numbers of the other businesses and/or tenants *(a separate diagram is not required for an establishment that is designating the entire building as a single licensed premises)*.

This form, and all necessary diagrams that meet the requirements on Page 2 of this form, must be completed and submitted to AMCO's main office before any new or transfer license application will be considered complete.

Section 1 – Establishment Information

Enter information for the business seeking to be licensed, as identified on the license application.

Licensee:	Caribbean Dreams LLC	**MJ License #:**		27854	
License Type:	Marijuana Cultivation Facility				
Doing Business As:	Ganja Guys of Alaska				
Premises Address:	101 E International Airport Rd				
City:	Anchorage	**State:**	Alaska	**ZIP:**	99518

Received by AMCO 5.18.21

Alaska Marijuana Control Board

Form MJ-02: Premises Diagram

Section 2 – Required Information

For your security, do not include locations of security cameras, motion detectors, panic buttons, and other security devices.
Items marked with a double asterisks (**) are only required for those retail marijuana establishments that are also applying for an onsite consumption endorsement.

The following details must be included in all diagrams:

- ☐ **License number and DBA**
- ☐ **Legend or key**
- ☐ **Color coding**
- ☐ **Licensed Premises Area Labeled and Shaded, or Outlined as appropriate**
- ☐ **Dimensions**
- ☐ **Labels**
- ☐ **True north arrow**

The following additional details must be included in Diagram 1:

- ☐ **Surveillance room**
- ☐ **Restricted access areas**
- ☐ **Storage areas**
- ☐ **Entrances, exits, and windows**
- ☐ **Walls, partitions, and counters**
- ☐ **Any other areas that must be labeled for specific license or endorsement types**
- ☐ **** Serving area(s)**
- ☐ ****Employee monitoring area(s)**
- ☐ ****Ventilation exhaust points, if applicable**

The following additional details must be included in Diagram 2:

- ☐ **Areas of ingress and egress**
- ☐ **Entrances and exits**
- ☐ **Walls and partitions**

The following additional details must be included in Diagrams 3 and 4:

- ☐ **Areas of ingress and egress**
- ☐ **Cross streets and points of reference**

The following additional details must be included in Diagram 5:

- ☐ **Areas of ingress and egress**
- ☐ **Entrances and exits**
- ☐ **Walls and partitions**
- ☐ **Cross streets and points of reference**

I declare under penalty of unsworn falsification that I have attached all necessary diagrams that meet the above requirements, and that this form, including all accompanying schedules, statements, and depictions is true, correct, and complete.

Signature of licensee

Jin Kyung Kim
Notary Public
State of Alaska
My commission expires:

Notary Public in and for the State of Alaska

My commission expires: 03/10/2025

Printed name of licensee

Subscribed and sworn to before me this 17th day of May, 2021.

Received by AMCO 5.18.21

DIAGRAMS 1, 2 & 5

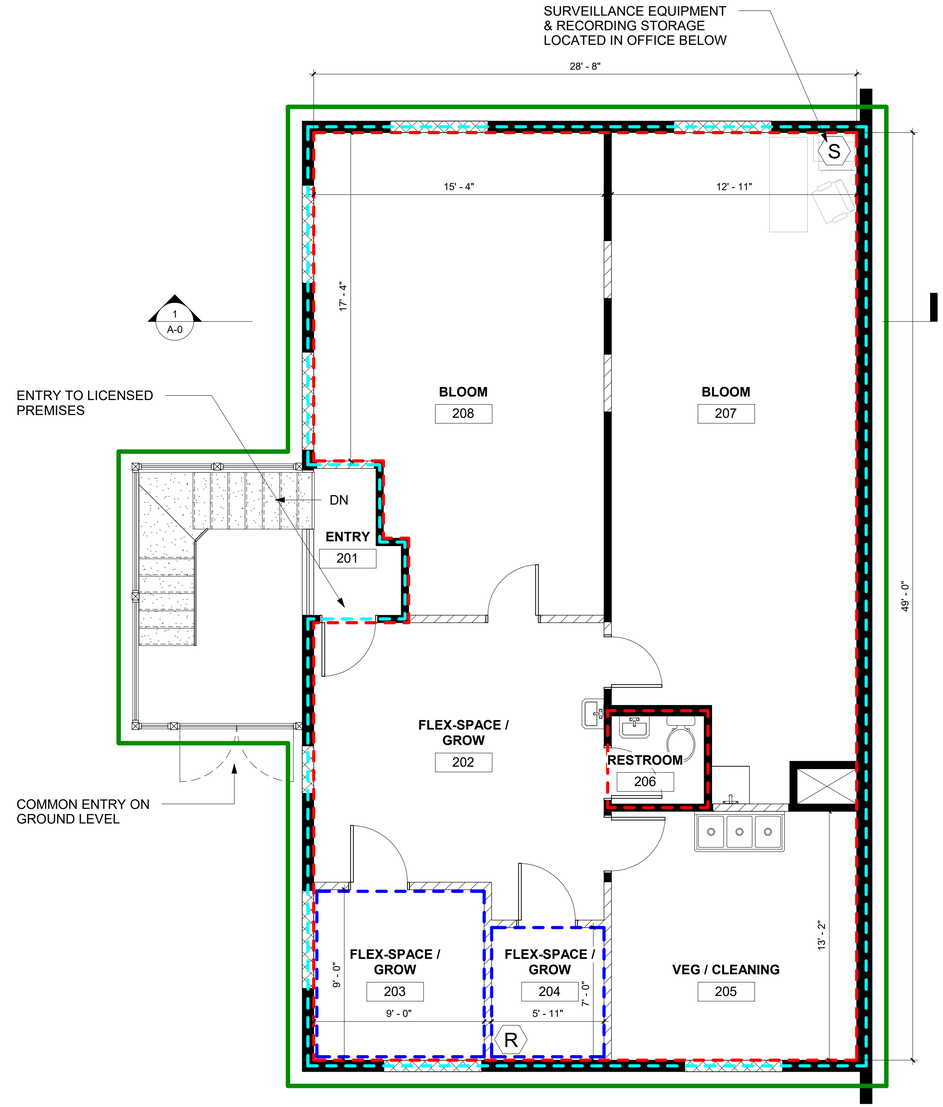

2ND FLOOR

AMCO KEY

- LICENSED LAWFUL RIGHT TO POSSESSION
- PROPOSED LICENSED PREMISES
- MARIJUANA STORAGE
- RESTRICTED ACCESS AREA
- (S) SURVEILLANCE EQUIPMENT & RECORDING STORAGE
- (R) SIX MONTHS BUSINESS RECORDS STORAGE

0' 5' 10' 15' 20'

SCALE: 1/4" = 1' - 0"

NOTE: USE HALF INDICATED SCALE FOR 11X17 DRAWINGS

JOB: # 201102

Determine DESIGN

Determine **DESIGN LLC** AECL1613
903 W. NORTHERN LTS, BLVD # 206
ANCHORAGE, AK 99503
Office: (907)339-9100
dan@determinedesign.com

Copyright: Determine Design LLC has the exclusive right to reproduce, sell and create derivative works from these drawing.

Sheet Issue Date:
2/4/2021 9:34:24 AM
Drawn by: CNH
Checked by: DHC

Project Title: Ganja Guys of Alaska, Cultivation
Prepared for: Caribbean Dreams, LLC
Sheet Title: AMCO MJ-02 DIAGRAMS
Address: 101 E Int'l. Airport Rd Anchorage, AK 99518

1

Received by AMCO 5.18.21

DIAGRAM 4

PROPOSED LICENSED PREMISES (2ND FLOOR)

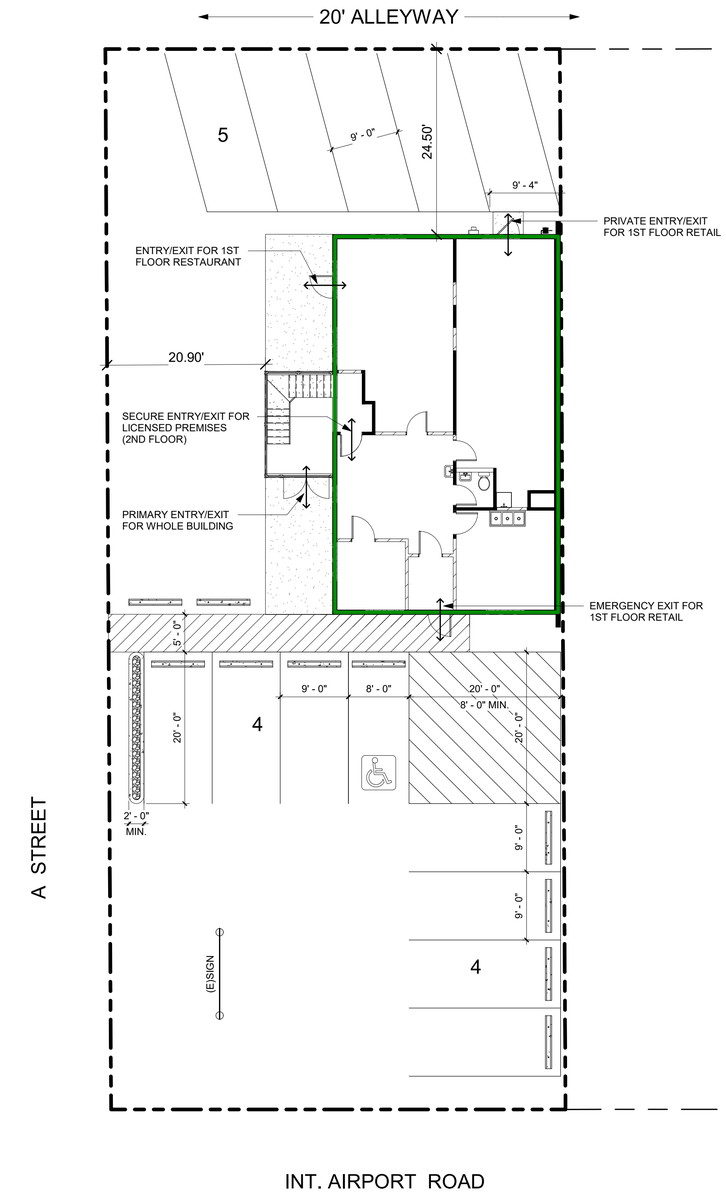

DIAGRAM 3

0' 10' 20' 40'
SCALE: 1" = 10' - 0"

PROPOSED LICENSED PREMISES / RIGHT TO POSSESSION

INGRESS & EGRESS

N

JOB: # 201102

Determine DESIGN

Determine DESIGN LLC AECL1613
903 W. NORTHERN LTS, BLVD # 206
ANCHORAGE, AK 99503
Office: (907)339-9100
dan@determinedesign.com

Copyright: Determine Design LLC has the exclusive right to reproduce, sell and create derivative works from these drawing.

Sheet Issue Date: 2/4/2021 9:34:24 AM
Drawn by: CNH
Checked by: DHC

Project Title: Ganja Guys of Alaska, Cultivation
Prepared for: Caribbean Dreams, LLC
Sheet Title: AMCO MJ-02 DIAGRAMS, CONT.
Address: 101 E Int'l. Airport Rd Anchorage, AK 99518

2

NOTE: USE HALF INDICATED SCALE FOR 11X17 DRAWINGS

Received by AMCO 5.18.21

VICINITY MAP - ANCHORAGE, ALASKA

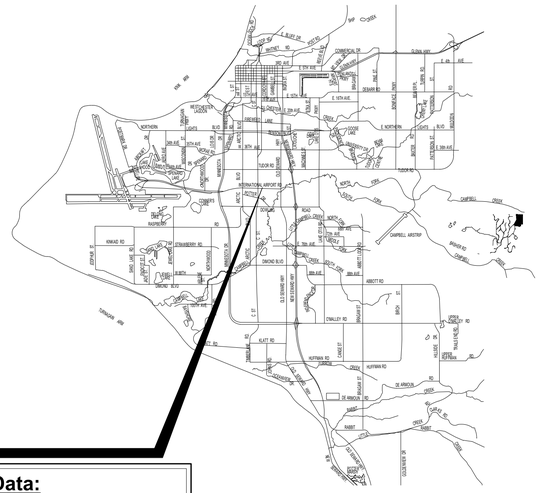

Site Data:
LEGAL: **SPRUCE HEIGHTS**
BLK 5 LT 22
ADDRESS: 101 E INT'L AIRPORT RD
CITY, STATE: ANCHORAGE, AK
ZONING: I-1
LOT SIZE: 8,400 SF
PARCEL: 009-212-12-000
GRID: SW1831

SITE VICINITY

NOTE: USE HALF INDICATED SCALE FOR 11X17 DRAWINGS

CODE REVIEW

I. CODE: 2012 INTERNATIONAL BUILDING CODE 2012 INTERNATIONAL FIRE CODE, 2012 EXISTING BUILDING CODE, & 2012 INTERNATIONAL ENERGY CONSERVATION CODE AS ADOPTED BY AMC TITLE 23.

II. SCOPE: CHANGE OF USE / ALTERATION
DESCRIPTION OF PROJECT: EXISTING LOW-RISE OFFICE BUILDING TO BE REPURPOSED FOR MARIJUANA RETAIL SALES. DEMO & ERECTION OF NON-LOAD BEARING WALLS, NEW CASEWORK & FINISHES, ADA UPGRADES AND LIMITED SITE IMPROVEMENTS PER LOCAL ORDINANCES.
SECOND FLOOR WORK LIMITED TO MINOR DEMO FOR IMPROVED EGRESS. T.I. WORK FOR CULTIVATION TO BE DONE UNDER A SEPARATE PERMIT. CULTIVATION ON THIS PERMIT APPLIES TO ZONING / LAND USE ONLY.

III. OCCUPANT CLASSIFICATION:

LEVEL	AREA	FUNCTION	OCC
GROUND	703 SF	M(STORAGE/STOCK)	2.3
GROUND	420 SF	M(RETAIL SALES)	14
GROUND	263 SF	A-2(SEATING)	17.5
GROUND	240 SF	A-2(KITCHEN)	1.2
2ND	1,500 SF	F-1(CULTIVATION)	5
		TOTAL OCC:	35

IV. SPECIAL DETAILED OCCUPANCY REQUIREMENTS
N/A

V. GENERAL HEIGHTS AND AREAS

ADDRESS IDENTIFICATION: EXISTING TO REMAIN
SIGNS SHALL BE PERMITTED SEPARATELY

BASIC ALLOWABLE (MOST RESTRICTIVE IBC T503): M(VA)
GROUP M: 14,000 SF / 3 STORY
GROUP A-2: 11,500 SF / 2 STORY
GROUP F-1: 14,000 SF / 2 STORY
NON-SEPARATED OCCUPANCIES

ACTUAL AREA/STORY: 1,626 SF / 2 STORY

VI. TYPES OF CONSTRUCTION

TYPE OF CONSTRUCTION REQUIRED: VA
OCCUPANT GROUP CLASSIFICATION (RESTRICTIVE): M

REQUIRED RATING (IBC T601) FOR VA CONSTRUCTION:

EXTERIOR WALL	1-HOUR
LOAD BEARING WALL	1-HOUR
NON-BEARING WALLS	NO RATING
FLOOR CEILING	1-HOUR
ROOF ASSEMBLY	1-HOUR

ROOF RATING FROM FIRE SIDE(INTERIOR)
DETERMINED FROM IBC TABLE 722.2.1.4(2) LOCATED ON SHEET A-0

EXTERIOR WALL REQUIRED RATING (IBC T602)

DISTANCE		RATING(MOST RESTRICTIVE)
X<5'	-	2-HOUR
5'<X<10'	-	1-HOUR
10'<X<30'	-	NO RATING

VII. FIRE RESISTANCE REQ'D
N/A

VIII. INTERIOR FINISHES TABLE 803.9 & 804.4

SPRINKLER (NOT REQUIRED)

CLASS C WALL/CEILING FINISHES REQUIRED
CLASS II FLOORS COMPLYING WITH DOC FF-1 'PILL TEST'

IX: FIRE PROTECTION SYSTEMS

IFC 506.1: PROVIDE KNOX BOX:"KEY BOX SHALL BE OF AN APPROVED TYPE LISTED IN ACCORDANCE WITH UL 1037, AND SHALL CONTAIN KEYS TO GAIN ACCESS AS REQUIRED BY THE CODE OFFICIAL."
MOUNT KNOX BOX AT 66" AFG

IFC 503: FIRE APPARATUS ROAD WITHIN 150' OF ALL EXTERIOR WALLS MEASURED BY WALKING DISTANCE.

IFC 903 NFPA 13 SPRINKLER: NOT REQUIRED

IFC 906.1: PORTABLE FIRE EXTINGUISHERS REQUIRED: EVERY 75'

IFC 907: MANUAL PULL FIRE ALARM: NOT REQUIRED

X. MEANS OF EGRESS
AREA:
CORRIDOR WIDTH SHALL NOT BE LESS THAN: 36"
DOORS SHALL NOT PROJECT MORE THAN 7" INTO WIDTH.

EXIT SIGNS REQUIRED WHERE MULTIPLE EXIT REQUIRED
EXIT SHALL BE ILLUMINATED, 90 MIN BATTERY BACKUP

MAX DEAD END: 20 FT (IBC 1018.4)
COMMON PATH: 75 FT (IBC T1014.3)

DISTANCE TO EXIT WHERE MULTIPLE: 200 FT (IBC T1016.2)

EGRESS PATH SHALL BE ILLUMINATED BY WITH 1 FOOT-CANDLE AT ALL TIMES WITH 90 MINUTE BATTERY BACKUP

STAIRS: N/A, NO NEW STAIRS

EXISTING STAIRS: EXISTING AND IN COMPLIANCE WITH IFC SECTION 1104.10: EXISTING STAIRS IN BUILDINGS SHALL BE PERMITTED TO REMAIN IF THE RISE DOES NOT EXCEED 81/4" AND THE RUN IS NOT LESS THAN 9 INCHES.

PANIC AND FIRE EXIT HARDWARE - 1008.1.10
EXCEPTION: A MAIN EXIT OF A GROUP A OCCUPANCY IN COMPLIANCE WITH SECTION 1008.1.9.3, ITEM2.

2. IN BUILDINGS IN OCCUPANCY GROUP A HAVING AN OCCUPANT LOAD OF 300 OR LESS, GROUPS B, F, M AND S AND IN PLACES OF WORSHIP, THE MAIN EXTERIOR DOOR OR DOORS ARE PERMITTED TO BE EQUIPPED WITH KEY-OPERATED LOCKING DEVICES FROM THE EGRESS SIDE PROVIDED:
2.1. THE LOCKING DEVICE IS READILY DISTINGUISHABLE AS LOCKED;
2.2. A READILY VISIBLE DURABLE SIGN IS POSTED ON THE EGRESS SIDE ON OR ADJACENT TO THE DOOR STATING: ***THIS DOOR TO REMAIN UNLOCKED WHEN BUILDING IS OCCUPIED.*** THE SIGN SHALL BE IN LETTERS 1 INCH HIGH ON A CONTRASTING BACKGROUND.
2.3. THE USE OF THE KEY-OPERATED LOCKING DEVICE IS REVOCABLE BY THE BUILDING OFFICIAL FOR DUE CAUSE.

XI: ACCESSIBILITY
NEW CONSTRUCTION & ALTERATIONS REQUIRE COMPLIANCE WITH ACCESSIBILITY WITH REGARD TO TOILET FACILITIES, DRINKING FOUNTAINS, AND PRIMARY FUNCTION.-PER ICC/ANSI A117.1-2009

IEBC: ALTERATION LESS THAN 50% VALUATION DOES NOT REQUIRE INCREASE WITH REGARD TO TOILET FACILITIES. MAINTAIN EXISTING LEVEL OF ACCESSIBILITY

XII: INTERIOR ENVIRONMENT

LIGHTING & TEMPERATURE MEP

MINIMUM ROOM HEIGHT NOT LESS THAN 7'-6"
EXCEPTION: STORAGE, RESTROOM, KITCHEN & MEZZANINE AREAS PERMITTED MINIMUM HEIGHT OF 7'-0"
MINIMUM WIDTH IN ALL OCCUPIED AREAS NOT LESS THAN 3' EXCEPT TO ACCESS MEP, 2'

UNOCCUPIED SPACES CRAWLSPACE OR ATTIC (NO):

ATTIC ACCESS: N/A, HOT ROOF

CRAWL SPACES: N/A, SOG

XXVIV: PLUMBING FACILITIES
(IBC T2902.1)

PROVIDED:
4 WATER CLOSETS
4 LAVATORIES
1 SERVICE SINK

CODE REVIEW; 2012 IEBC

CHAPTER 5 IEBC; CHANGE OF USE FROM ***B*** TO ***M & F-1***

IEBC: T1012.4, MEANS OF EGRESS HAZARD CATEGORIES
CHANGE: 4 TO 3 (INCREASE)
IEBC: T1012.5, HEIGHTS AND AREAS HAZARD CATEGORY
CHANGE: 4 TO 3 (INCREASE)
IEBC: T1012.6, EXTERIOR EXPOSURE HAZARD CATEGORY
CHANGE: 3 TO 2 (INCREASE)
IBC: T1604.5, RISK CATEGORIES & OTHER STRUCTURES
NO CHANGE: CATEGORY II

INDEX

G-1	Vicinity, Index & Code Review
SD-1	Site Plan
A-0	Specifications
A-0.1	Level 1 Demo Plan
A-0.2	Level 2 Demo Plan
A-1.1	Level 1 Floor Plan
A-1.3	Roof Plan, Existing
A-2.1	Level One Reflected Ceiling Plan
A-3.1	Sections / Elevations
A-4.0	Elevations, Demo
A-4.1	Elevations

JOB: # 200101

Determine DESIGN

Determine **DESIGN LLC** AECL1613
903 W. NORTHERN LTS, BLVD # 206
ANCHORAGE, AK 99503
Office: (907)339-9100
dan@determinedesign.com

Copyright: Determine Design LLC has the exclusive right to reproduce, sell and create derivative works from these drawing.

Sheet Issue Date:
3/25/2020 3:32:28 PM
Drawn by: CNH
Checked by: DHC

SCHEMATIC DEVELOPMENT PHASE

65%
NOT FOR CONSTRUCTION

Project Title: Ganja Guys
Prepared for: Caribbean Dreams, LLC
Sheet Title: Vicinity, Index & Code Review
Address: 101 E Int'l. Airport Rd Anchorage, AK 99518

G-1

C20-____

Received by AMCO 5.18.21

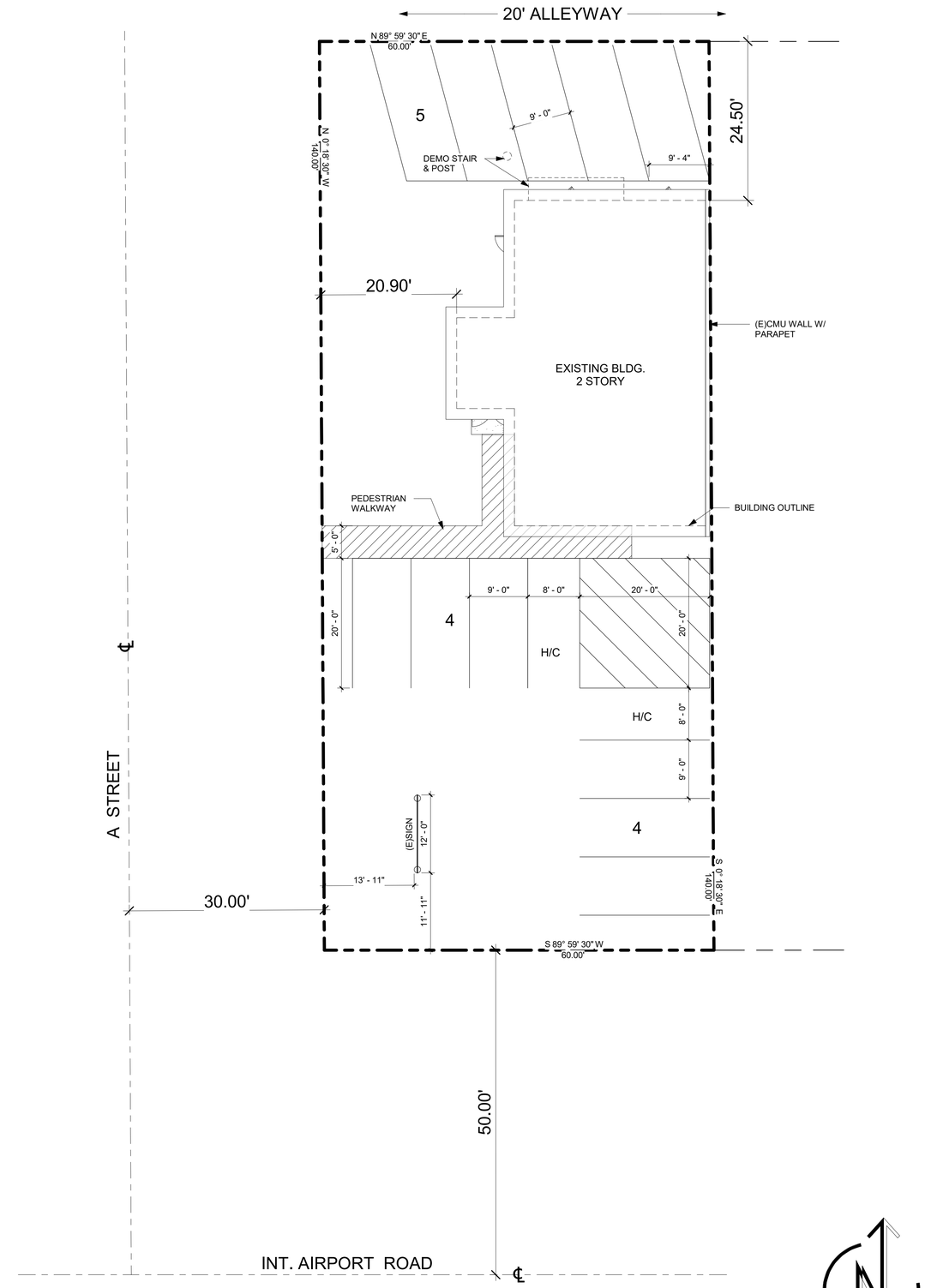

1 Site Plan
1" = 10'-0"

NOTE: USE HALF INDICATED SCALE FOR 11X17 DRAWINGS

TITLE 21 CODE REVIEW - DETAILS

Site Data:
LEGAL: **SPRUCE HEIGHTS**
BLK 5 LT 22
ADDRESS: 101 E INT'L AIRPORT RD
CITY, STATE: ANCHORAGE, AK
ZONING: I-1
LOT SIZE: 8,400 SF
PARCEL: 009-212-12-000
GRID: SW1831

ZONING: 21.04-07

USE SPECIFIC STANDARDS:
(21.05.055.B.1) MARIJUANA CULTIVATION
(21.05.055.B.4) MARIJUANA RETAIL SALES
(21.05.050.E.3) RESTAURANT

TRASH ENCLOSURE: N/A TRASH STORED INSIDE UNTIL TRASH PICK-UP DAY (21.07.080.G.2.a.v)

LANDSCAPING: TBD - SEE N.C.D.
A STREET: L1
INT. AIRPORT RD: L1

SNOW STORAGE: NOT SHOWN - 21.07.040.F.1

AASHTO SITE TRIANGLE: N/A

STREET CLASSIFICATIONS:
A STREET: LOCAL
INT. AIRPORT RD: MAJOR ARTERIAL III

COVERAGE: N/A

OPEN SPACE REQUIREMENT: N/A - 21.07.030.C.6

LANDSCAPE ARCHITECT REQUIRED: N/A

PEDESTRIAN CONNECTION TO ENTRANCE REQ'D; PROVIDED

SIGNS SHALL BE PERMITTED SEPARATELY

PREVIOUS PARKING REQUIRED (21.07-4):
3,126 / 350 = 8.9
(OFFICE)
TOTAL REQUIRED: **9**

CURRENT PARKING REQUIRED (21.07-4):
1,123 / 350 = 3.2
(RETAIL & OFFICE)

503 / 100 = 5
(CAFE) [263 SF SEATING - 240 SF KITCHEN]

1,500 / 1,000 = 1.5
(CULTIVATION)

TOTAL NOW REQUIRED = **9.7(10)**

SPACES PROVIDED: 10

JOB: # 200101

Determine DESIGN

Determine **DESIGN LLC** AECL1613
903 W. NORTHERN LTS, BLVD # 206
ANCHORAGE, AK 99503
Office: (907)339-9100
dan@determinedesign.com

Copyright: Determine Design LLC has the exclusive right to reproduce, sell and create derivative works from these drawing.

Sheet Issue Date:
3/25/2020 3:32:29 PM
Drawn by: CNH
Checked by: DHC

SCHEMATIC DEVELOPMENT PHASE

65%
NOT FOR CONSTRUCTION

Project Title: Ganja Guys
Prepared for: Caribbean Dreams, LLC
Sheet Title: Site Plan
Address: 101 E Int'l. Airport Rd Anchorage, AK 99518

SD-1

C20-____

Received by AMCO 5.18.21

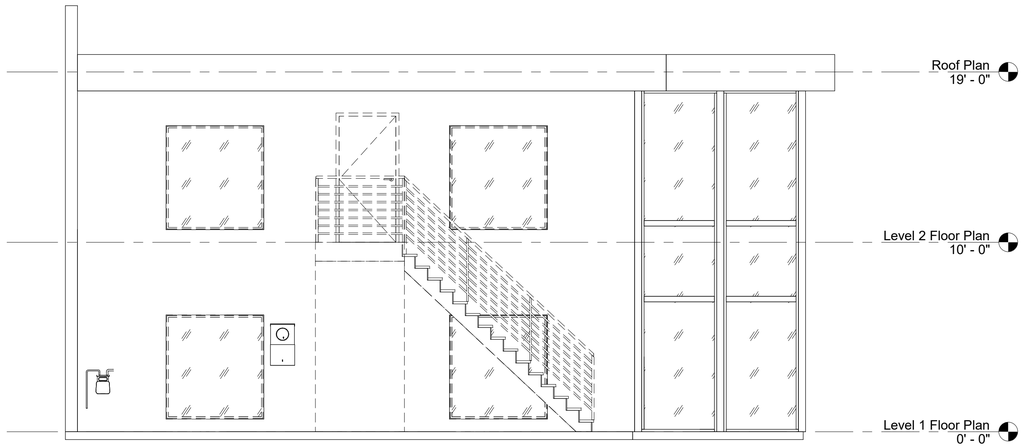

2 North, Existing
1/4" = 1'-0"

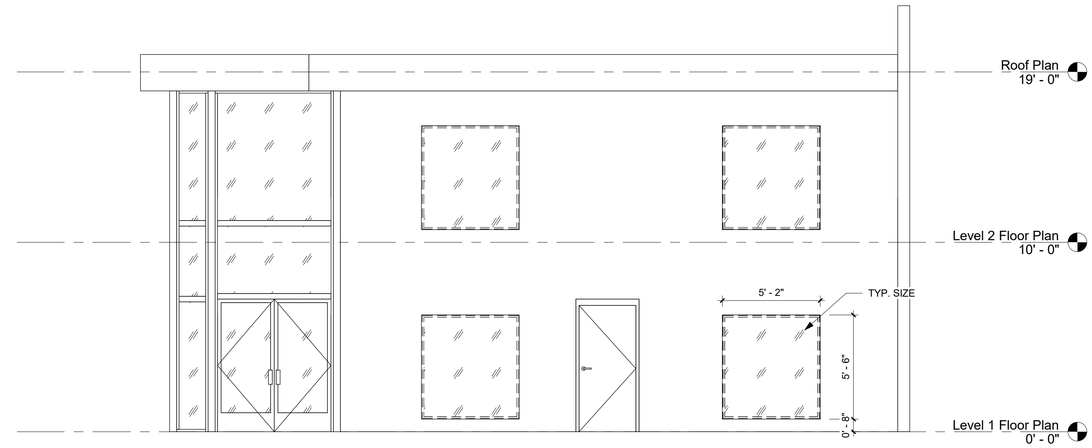

1 South, Existing
1/4" = 1'-0"

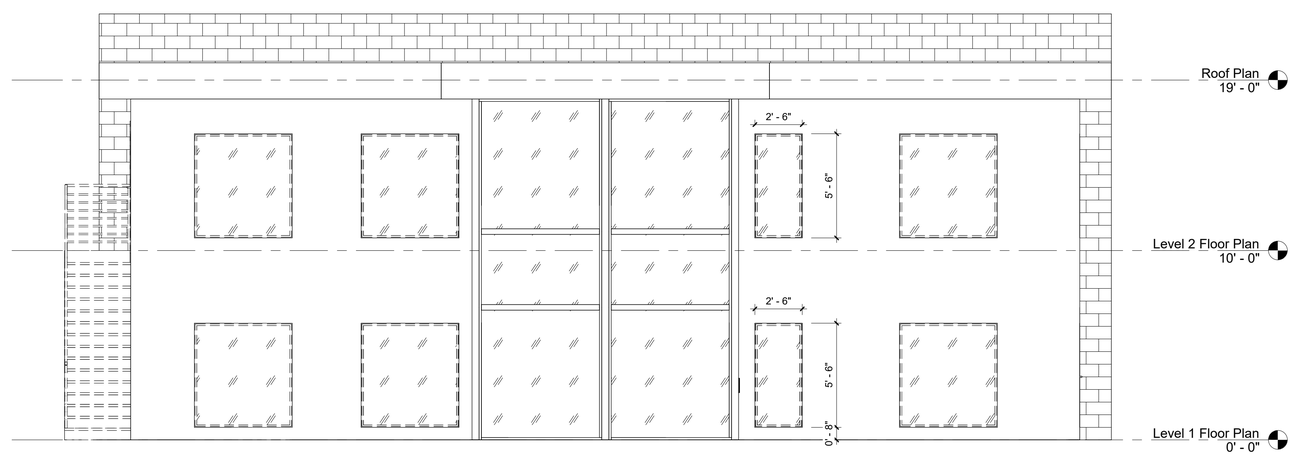

3 West, Existing
1/4" = 1'-0"

NOTE: USE HALF INDICATED SCALE FOR 11X17 DRAWINGS

JOB: # 200101

Determine
DESIGN

Determine **DESIGN LLC** AECL1613
903 W. NORTHERN LTS, BLVD # 206
ANCHORAGE, AK 99503
Office: (907)339-9100
dan@determinedesign.com

Copyright: Determine Design LLC has the exclusive right to reproduce, sell and create derivative works from these drawing.

Sheet Issue Date:
3/25/2020 3:32:26 PM
Drawn by: CNH
Checked by: DHC

SCHEMATIC
DEVELOPMENT
PHASE

65%
NOT FOR CONSTRUCTION

Project Title: Ganja Guys
Prepared for: Caribbean Dreams, LLC
Sheet Title: Elevations, Demo
Address: 101 E Int'l. Airport Rd Anchorage, AK 99518

A-4.0

C20-_____

Received by AMCO 5.18.21

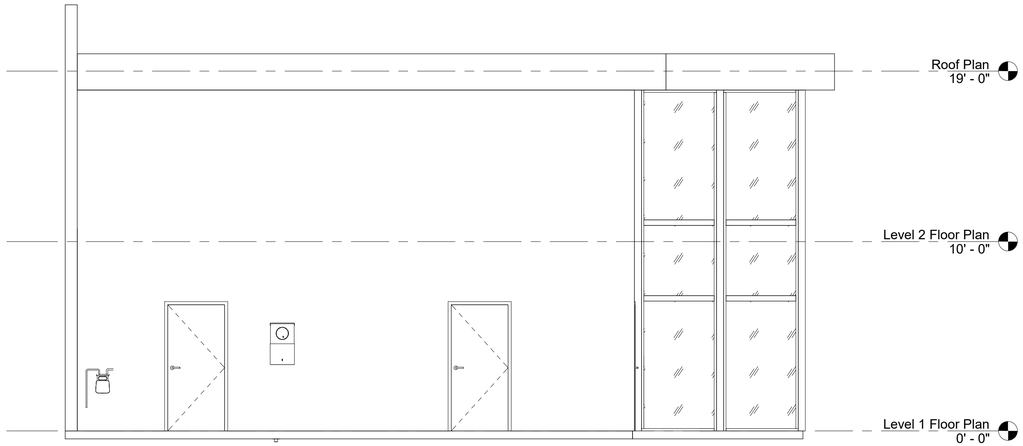

2 North
1/4" = 1'-0"

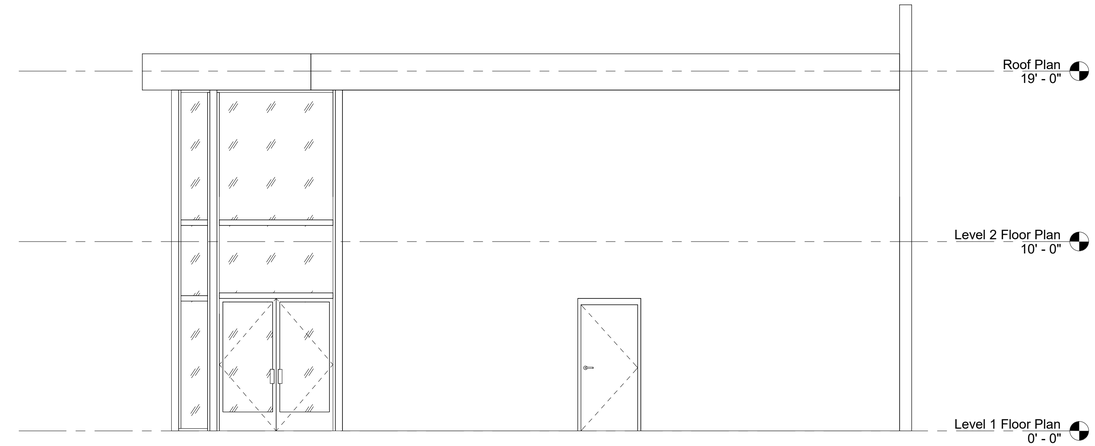

1 South
1/4" = 1'-0"

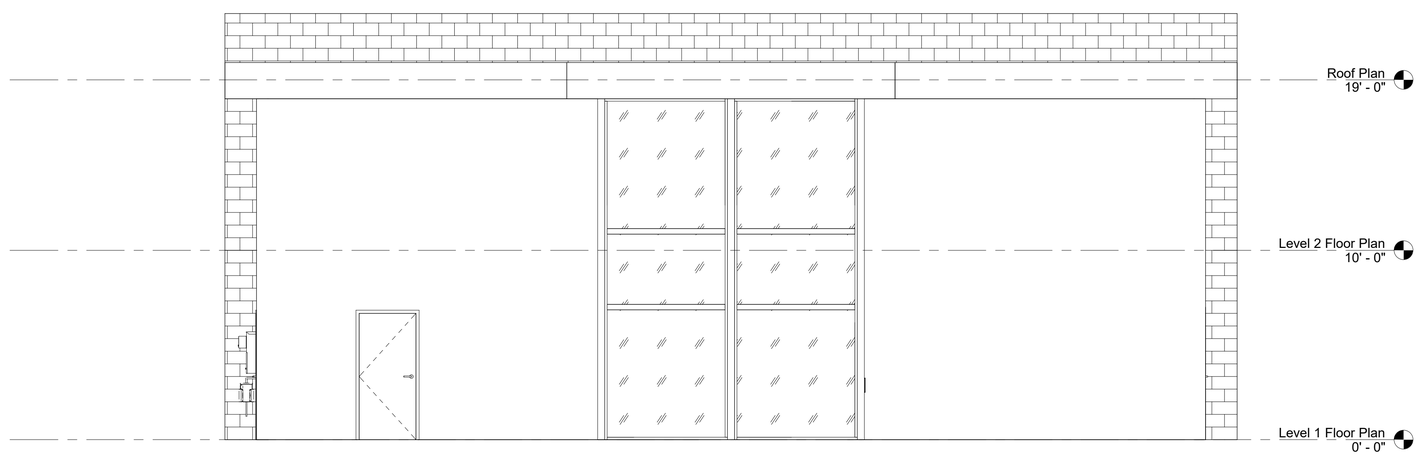

3 West
1/4" = 1'-0"

NOTE: USE HALF INDICATED SCALE FOR 11X17 DRAWINGS

JOB: # 200101

Determine
DESIGN

Determine **DESIGN LLC** AECL1613
903 W. NORTHERN LTS, BLVD # 206
ANCHORAGE, AK 99503
Office: (907)339-9100
dan@determinedesign.com

Copyright: Determine Design LLC has the exclusive right to reproduce, sell and create derivative works from these drawing.

Sheet Issue Date:
3/25/2020 3:32:28 PM
Drawn by: CNH
Checked by: DHC

SCHEMATIC
DEVELOPMENT
PHASE

NOT FOR CONSTRUCTION
65%

Project Title: Ganja Guys
Prepared for: Caribbean Dreams, LLC
Sheet Title: Elevations
Address: 101 E Int'l. Airport Rd Anchorage, AK 99518

A-4.1

C20-_____

Received by AMCO 5.18.21

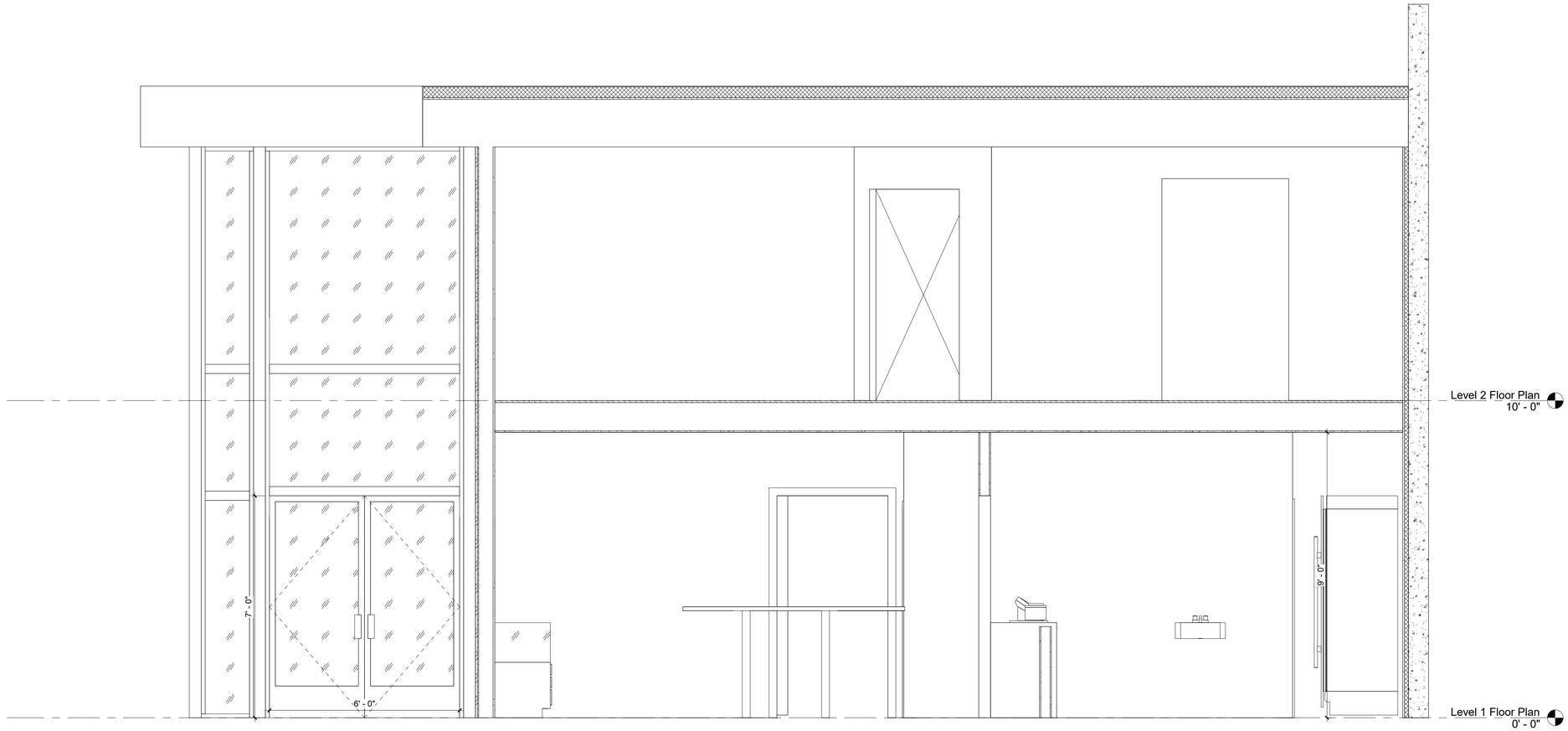

1 Section
1/2" = 1'-0"

NOTE: USE HALF INDICATED SCALE FOR 11X17 DRAWINGS

JOB: # 200101

Determine
DESIGN

Determine **DESIGN LLC** AECL1613
903 W. NORTHERN LTS, BLVD # 206
ANCHORAGE, AK 99503
Office: (907)339-9100
dan@determinedesign.com

Copyright: Determine Design LLC has the exclusive right to reproduce, sell and create derivative works from these drawing.

Sheet Issue Date:
3/25/2020 3:32:25 PM
Drawn by: CNH
Checked by: DHC

SCHEMATIC
DEVELOPMENT
PHASE

NOT FOR CONSTRUCTION
65%

Project Title: Ganja Guys
Prepared for: Caribbean Dreams, LLC
Sheet Title: Sections / Elevations
Address: 101 E Int'l. Airport Rd Anchorage, AK 99518

A-3.1

C20-____

Received by AMCO 5.18.21

SPECIFICATIONS

01 GENERAL REQUIREMENTS

A. PROJECT IDENTIFICATION: GANJA GUYS
B. PROJECT SUMMARY: INTERIOR TENANT IMPROVEMENT
C. DESCRIPTION OF WORK: DEMO & ERECT NEW NON-LOAD BEARING PARTITIONS, NEW PLUMBING FIXTURES & SITE WORK AS INDICATED
D. PERMITS AND FEES ARE THE RESPONSIBILITY OF OWNER TO PURCHASE AND CONTRACTOR TO OBTAIN.
E. CODES: COMPLY WITH APPLICABLE CODES AND REGULATIONS OF AUTHORITIES HAVING JURISDICTION. SUBMIT COPIES OF INSPECTION REPORTS, NOTICES AND SIMILAR COMMUNICATIONS TO ARCHITECT.
F. DIMENSIONS: VERIFY DIMENSIONS INDICATED ON DRAWINGS WITH FIELD DIMENSIONS BEFORE FABRICATION OR ORDERING OF MATERIALS.
G. EXISTING CONDITIONS: NOTIFY ARCHITECT OF EXISTING CONDITIONS DIFFERING FROM THOSE INDICATED ON THE DRAWINGS. DO NOT REMOVE OR ALTER STRUCTURAL COMPONENTS OR FILL WITHOUT PRIOR WRITTEN APPROVAL FOR PERMIT.
H. COORDINATION
1. COORDINATE WORK OF ALL TRADES
2. PREPARE COORDINATION DRAWINGS OF WORKING AREAS WITH CLOSE TOLERANCES
3. VERIFY LOCATION OF UTILITIES AND EXISTING CONDITIONS.

I. ADJUSTMENT TO SPRINKLER HEAD: N/A
J. ADJUSTMENT TO EMERGENCY ALARM: N/A

02 EXISTING CONDITIONS (NOT USED)

03 CONCRETE

REPAIR OF EXISTING CONCRETE: REFER TO ACI GUIDELINES, PUBLICLY AVAILABLE.

SIDEWALK AND WALKING SURFACE: MAXIMUM RUNNING SLOPE 1:20, MAXIMUM CROSS SLOPE 1/4:12. LOCATE CONTROL JOINTS 4' O.C.. BROOM FINISH ALL WALKING SURFACE. MAXIMUM GRADE CHANGE OF 1/2" ON ACCESSIBLE ROUTE.

04 MASONRY (NOT USED)

05 METALS (NOT USED)

06 WOOD, PLASTIC, COMPOSITES (NOT USED)

07 THERMAL & MOISTURE PROTECTION (NOT USED)

23.60.402.1.1 - INSULATION AND FENESTRATION CRITERIA - CLIMATE ZONE: 7

- WALLS - ABOVE GRADE - WOOD FRAMED AND OTHER R-13+ R-7.5CI OR R-21
- OPAQUE DOORS - SWINGING U-0.50 (R-2)
- OPAQUE DOORS - ROLL-UP OR SLIDING U-0.50 (R-2)
- VERTICAL FENESTRATION; FRAMING MATERIALS OTHER THAN METAL WITH OR WITHOUT METAL REINFORCEMENT OR CLADDING U-0.35 (R-2.9)

VAPOR RETARDER: INTERIOR INSULATION LINER TO FUNCTION AS CLASS 1 VAPOR RETARDER: ALLOWING NO GREATER THAN 1 PERM.

AIR BARRIER: SHALL BE IMPERMEABLE TO MOISTURE INFILTRATION BUT PERMEABLE TO VAPOR EXHAUST. SUBSTRATE (PLYWOOD, EXTERIOR GYPSUM, ETC.) MUST BE COMPLETELY DRY PRIOR TO INSTALLATION. ALL PENETRATIONS SHALL BE SEALED: SELF-CLOSING SEALANT FOR EXTERIOR FASTENERS & LIQUID SPRAY-APPLIED FOR WINDOWS AND DUCT PENETRATIONS. INSTALLATIONS OVER 40' SHALL ALSO COMPLY WITH ASTM E84 FOR SURFACE BURNING CHARACTERISTICS.

SEALANT: ALL EXTERIOR SEALANT USED FOR PENETRATIONS MUST BE OF ELASTOMERIC MATERIAL CAPABLE OF THERMAL MOVEMENT AND RECOVERY. SILICONE SEALANT(20 YEAR LIFE) TO BE USED FOR GLAZING, POLYURETHANE (5 YEAR LIFE) OR HYBRID *'STPE'*(10 YEAR LIFE) FOR OTHERS. PREPARE JOINT: CLEAN, DRY, FREE OF PAINT FOR FULL ADHESION. APPLY BACKER ROD TO JOINTS OR, WHERE DEPTH DOES NOT PERMIT, BOND-BREAKER TAPE. DEPTH OF JOINT FILL SHOULD BE APPROXIMATELY HALF OF WIDTH, WITH A MINIMUM OF 1/4" DEPTH AND A MAXIMUM OF 1/2" DEPTH. ALL JOINTS MUST BE TOOLED FLUSH. PULL-TEST ADHESION POST-INSTALL. NON-ELASTOMERIC, CAULK, MAY BE USED FOR INTERIOR APPLICATIONS ONLY.

08 OPENINGS

DOOR HARDWARE: ALL FINISHES TO BE STAINLESS, CHROME, OR BRUSHED NICKEL, SEE DOOR SCHEDULE FOR SPECIFIC HARDWARE SCHEDULES .FURNISH HARDWARE AS NOTES IN DOOR HARDWARE SCHEDULE BEST PRODUCTS OF HAGAR, SCHLAGE, LCN.

L: PASSAGE LOCK, DOES NOT LOCK ON EITHER SIDE, EITHER LEVER OPERATES LATCHBOLT AT ALL TIMES.

E: ENTRY LOCK/LATCH, LATCHBOLT ON ENTRY SIDE, EITHER LEVER OPERATES LATCHBOLT EXCEPT WHEN LOCKED FROM EGRESS SIDE, LOCKED POSITION MAY BE RETAINED OR MAY RESET EVERY ENTRY, LATCHBOLT IS ONLY OPERATED VIA KEY ON ENTRY SIDE WHILE LOCKED, EGRESS SIDE LEVER ALWAYS ACTIVE.

B: BATHROOM PRIVACY LOCK, EITHER LEVER OPERATES LATCHBOLT UNLESS LOCKED FROM EGRESS SIDE, LOCK AUTOMATICALLY RELEASES WITH OPERATION OF EGRESS SIDE LEVER, EMERGENCY KEY UNLOCKS LATCH FROM ENTRY SIDE, EGRESS LEVER ALWAYS ACTIVE. OCCUPANT INDICATOR TO BE INCLUDED

C: CLASSROOM LOCK, KEY REQUIRED OPERATION, INGRESS SIDE ONLY

***!:** WHERE INDICATED PROVIDE PANIC HARDWARE, PUSH BAR FOR EMERGENCY ESCAPE.

DOOR FRAMES: KD 20 GA. EXTERIOR, 18 GA INSULATED HOLLOW METAL INTERIOR. HOLLOW METAL: PROVIDE HOLLOW METAL FROM COLD FORMED SHEET STEEL. GAGE AS INDICATED FOR DOOR AND RELITE FRAMES. PREFABRICATE FOR HARDWARE AND GLAZING, THROAT TO MATCH WALL THICKNESS. KD DOOR FRAMES ARE ACCEPTABLE. MANUFACTURE PER CODE FOR THE APPLICATION. BY TIMELY DOORS, REPUBLIC, OR APPROVED EQUAL. FURNISH PRE-FINISHED OR FIELD PAINT UPON APPROVAL OF BUILDING OWNER'S REPRESENTATIVE.

WINDOWS & GLASS: INSTALL PER MANUFACTURER RECOMMENDATIONS. WHERE WITHIN 3' OF DOOR, STAIR LANDING, OR 18" FROM WALKING SURFACE USE SAFETY GLASS.

09 FINISHES

SEE ROOM FINISH SCHEDULE FOR SPECIFIC ROOM FINISH

ACOUSTIC CEILING:TO BE INSTALLED PER ASTM C636 & ASTM E580 DESIGN CATEGORY 'D';

- MINIMUM 2" WALL MOLDING
- SUSPENSION SYSTEM MUST BE ATTACHED TO TWO ADJACENT WALLS - OPPOSITE WALLS MUST HAVE A 3/4" CLEARANCE.
- ENDS OF MAIN BEAMS AND CROSS TEES MUST BE TIED TOGETHER TO PREVENT THEIR SPREADING
- CEILING AREAS OVER 1,000 SF MUST HAVE HORIZONTAL RESTRAINT WIRE 45°, 4 SPLAY-12 GA WIRE, 12' O.C. MAX
- CEILING AREAS OVER 2,500 SF MUST HAVE SEISMIC SEPARATION JOINTS OR FULL HEIGHT PARTITIONS
- CEILINGS WITHOUT RIGID BRACING MUST HAVE 2" OVERSIZED TRIM RINGS FOR SPRINKLERS AND OTHER PENETRATIONS
- CHANGES IN CEILING PLANE MUST HAVE POSITIVE BRACING
- CABLE TRAYS AND ELECTRICAL CONDUITS MUST BE INDEPENDENTLY SUPPORTED AND BRACED
- SUSPENDED CEILINGS WILL BE SUBJECT TO SPECIAL INSPECTION
- BRACE WALLS AND LIGHT FIXTURES INDEPENDENT FROM CEILING WITH WIRE
- PROVIDE 2" OVERSIZE RINGS FOR PENETRATIONS

10 SPECIALTIES

SIGNAGE: PER ANSI A117.1 ADA RESTROOM SIGN
(1) CHARACTERS AND THEIR SYMBOLS THAT CONTRAST WITH THEIR BACKGROUND. (2) IDENTIFICATION SYMBOLS ARE TO BE CENTERED ON THE DOOR 60" ABOVE FLOOR AND ARE TO BE DIFFERENT FROM THE DOOR IN COLOR AND CONTRAST. (3) ADA SIGN REQUIRED. PROVIDE IDENTIFICATION SIGN ON STRIKE SIDE OF DOOR LETTERS AND NUMBERS ON SIGNS SHALL BE RAISED 1/32" MIN. SHALL BE A MINIMUM OF 5/8" HIGH & SHALL BE SAN-SERIF UPPERCASE CHARACTERS ACCOMPANIED BY GRADE 2 BRAILLE

TOILET COMPARTMENTS: BEST PRODUCTS OF BOBRICK OR SIMILAR.

TOILET ACCESSORIES, WITH ABBREVIATIONS
GB: ANSI GRAB BARS, SEE DRAWINGS FOR DIMENSIONS AND MOUNTING LOCATIONS.
SD: SOAP DISPENSER, SURFACE MOUNT
TP: TOILET PAPER ROLL, SURFACE MOUNT
HS: HANDY-SHIELD MOUNTED TO UNDERSIDE OF DRAIN
PT: PAPER TOWEL AND TRASH DISPENSER, SURFACE MOUNT

11 EQUIPMENT (NOT USED)

12 FURNISHINGS (NOT USED)

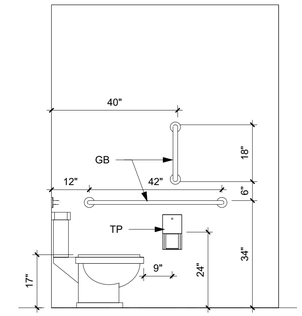

4 ADA Side View
1/2" = 1'-0"

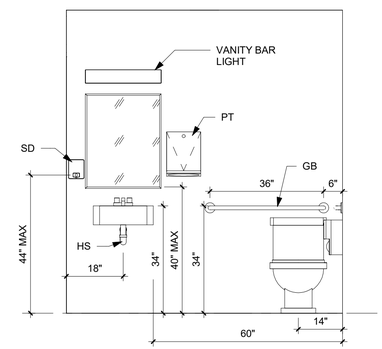

6 ADA Front View
1/2" = 1'-0"

TABLE 722.2.1.4(2)
TIME ASSIGNED TO FINISH MATERIALS ON FIRE-EXPOSED SIDE OF WALL

FINISH DESCRIPTION	TIME (minutes)
GYPSUM WALLBOARD	
3/8"	10
1/2"	15
5/8"	20
2 LAYERS OF 3/8"	25
1 LAYER 3/8", 1 LAYER 1/2"	35
2 LAYERS 1/2"	40
TYPE X GYPSUM WALLBOARD	
1/2"	25
5/8"	40
PORTLAND CEMENT-SAND PLASTER ON MASONRY	See Note a
PORTLAND CEMENT-SAND PLASTER ON METAL LATH	
3/4"	20
7/8"	25
1"	30
GYPSUM SAND PLASTER ON 3/8" GYPSUM LATH	
1/2"	35
5/8"	40
3/4"	50
GYPSUM SAND PLASTER ON METAL LATH	
3/4"	50
7/8"	60
1"	80

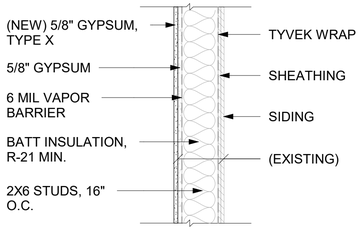

NOTE:
FOR WINDOW INFILLS, MATCH THIS DETAIL W/ ALL NEW MATERIALS

1 1-Hour Exterior Wall
1" = 1'-0"

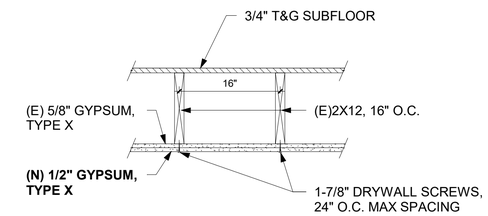

2 1-Hour Horizontal Assembly
1" = 1'-0"

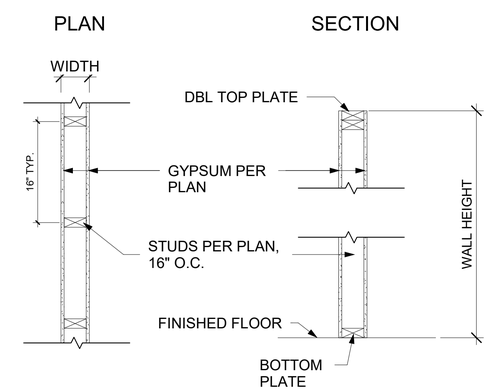

WALL NOTES:
1. WHERE NOTED PROVIDE 1-HOUR ASSEMBLY PER UL U305, U311, U314, U327 OR U344.
2. WHERE NOTED PROVIDE 2-HOUR ASSEMBLY PER UL U334 OR PRESCRIPTIVE FIRE RESISTANCE BASED ON 2012 IBC TABLE 722.2.1.4(2)

3 New Partition, TYP.(Wood Stud)
1" = 1'-0"

NOTE: USE HALF INDICATED SCALE FOR 11X17 DRAWINGS

JOB: # 200101

Determine DESIGN

Determine **DESIGN LLC** AECL1613
903 W. NORTHERN LTS, BLVD # 206
ANCHORAGE, AK 99503
Office: (907)339-9100
dan@determinedesign.com

Copyright: Determine Design LLC has the exclusive right to reproduce, sell and create derivative works from these drawing.

Sheet Issue Date:
3/25/2020 3:32:18 PM
Drawn by: CNH
Checked by: DHC

SCHEMATIC DEVELOPMENT PHASE

65%
NOT FOR CONSTRUCTION

Project Title: Ganja Guys
Prepared for: Caribbean Dreams, LLC
Sheet Title: Specifications
Address: 101 E Int'l. Airport Rd Anchorage, AK 99518

A-0

C20-____

Received by AMCO 5.18.21