AMCO received 5/14/2022

Alcohol and Marijuana Control Office
550 W 7th Avenue, Suite 1600
Anchorage, AK 99501
marijuana.licensing@alaska.gov
https://www.commerce.alaska.gov/web/amco
Phone: 907.269.0350

Alaska Marijuana Control Board

Operating Plan Supplemental
Form MJ-28b: Onsite Consumption Marijuana Retail Endorsement

What is this form?

An operating plan supplemental form is required for all retail marijuana establishments seeking an onsite consumption endorsement. Applicants should review **Alaska Regulation 306.370.** This form will be used to document how an applicant intends to meet the requirements of the regulation.

What must be covered in this operating plan supplemental?

Applicants must identify how the proposed onsite consumption premises will comply with applicable statutes and regulations regarding the following:

- Security [in addition to what is required for a retail store].
- Ventilation [if consumption by inhalation is to be permitted].
- Monitoring overconsumption.
- Disposal or packaging of unconsumed marijuana.
- Prevention of the introduction of marijuana products not sold by the retail marijuana store or products not sold for onsite consumption.

This form must be completed and submitted to AMCO's main office before any new onsite consumption endorsement application will be considered complete.

Section 1 – Establishment & Contact Information

Enter information for the business seeking to be licensed, as identified on the license application.

Licensee:	Pakalolo Supply Company, Inc.	**MJ License #:**	10131		
License Type:	Retail Marijuana Store				
Doing Business As:	Pakalolo Supply Company				
Premises Address:	1851 Fox Avenue				
City:	Fairbanks	**State:**	Alaska	**ZIP:**	99709

Mailing Address:	3264 Riverview Drive				
City:	Fairbanks	**State:**	Alaska	**ZIP:**	99709

Designated Licensee:	Howard C. Hollister		
Main Phone:	907-322-9575	**Cell Phone:**	907-322-9575
Email:	chollister@hollisterenterprises.com		

Which type(s) of consumption will occur at your premises (check all that apply):

Consumption by inhalation (smoking or vaping)- ☑ **Consumption by other method(s)-** ☑

AMCO received 5/14/2022

Form MJ-28b: Onsite Consumption Endorsement Operating Plan

Section 1 – Freestanding

Freestanding Licensed Retail Store (3 AAC 306.370(a) and AS 18.35.301(i)(1))

Please read the definition of "Freestanding" as defined in AS 18.35.301(i)(1) below-

"freestanding" means a building that is not supported by another structure and does not share ventilation or internal air space with an adjoining structure and smoke from the building cannot travel into the adjoining structure.

You must be able to certify the statements below. Read the following and then sign your initials in the box to the right: Initials

1.1- I certify that the location for which I am requesting this endorsement is "freestanding" as defined by AS 18.35.301(i)(1).

1.2- I certify that I have attached to this operating plan a photo of each side of the exterior of my building that show it meets the definition of "freestanding."

Section 2 – Security

Security (3 AAC 306.370(d)(1)(A)) and 3 AAC 306.370 (c)(1)

2.1. Describe the equipment in place (doors and locks) that will provide security for your consumption space, including access points and windows:

All exterior doors and windows feature alarm contacts that will trip the siren alarm and directly notify local authorities in the event of an unauthorized breach. The interior of the building is equipped with motion sensors tied to the alarm system. Panic buttons are also available to employees in the retail store in case of emergency. Cameras will be located at each exterior entrance and throughout all areas of the consumption space. Backup footage will be available for the required period of time. Pakalolo employees will monitor and review surveillance to coordinate with local law enforcement for apprehension and prosecution of any breaches to security. All exterior doors have commercial grade locks and hardware, and will remain locked before the opening and after the closing of the retail store and consumption lounge.

2.2. Describe how you will prevent diversion of marijuana and marijuana product from your consumption area:

Metrc will be used diligently to track all cannabis products as they move between licenses. The Point of Sale system is also tied directly to Metrc to constantly update inventory. This will ensure that no diversion will occur during the product transfer and retail sale processes. Each license will maintain records related to each product transfer. Inventory audits will be done regularly to provide a constant monitoring process to prevent the possibility of diversion. No marijuana and marijuana product will be accessible to customers unless purchased from an employee. All retail and consumption area employees will be trained to watch for and prevent any possible diversion of marijuana or marijuana products. Any missing product or possible diversion will be immediately reported to local law enforcement and AMCO. Customers will only be allowed to remove marijuana or marijuana products from the consumption area if those products include the required packaging and labeling.

AMCO received 5/14/2022

Form MJ-28b: Onsite Consumption Endorsement Operating Plan

2.3. Describe how you will prevent access by persons under the age of 21 to your consumption area:

Employees will require approved valid photo identification to ensure everyone who enters the premises is twenty-one years of age or older. Anyone under the age of twenty-one will be denied access to the retail store and consumption area.

2.4. Describe how the consumption area shall be isolated from the other areas of the retail marijuana store:

The consumption area will be separated from the retail store by a wall and secure door. Access to the consumption area will be located at the back of the retail store. All customers entering, or passing through the retail store to the consumption area, will have to show valid ID. Employees will monitor access in and out of the consumption area.

You must be able to certify the statement below. Read the following and then sign your initials in the box to the right:	Initials
2.5. The proposed area(s) for consumption are clearly identified on Form MJ-02: Premises Diagram or MJ-14: Premises Diagram Change that is submitted with this application.	HH

Answer "Yes" or "No" to the following question:	Yes	No
2.6 Will the consumption area be outdoors?	☐	☑

If "Yes", describe the outdoor structure(s) or the expanse of open or clear ground and how it is fully enclosed by a sight-obscuring wall or fence:

If "Yes", describe the neighboring uses and state why an outdoor consumption area is compatible with the surrounding area:

AMCO received 5/14/2022

Section 3 – Ventilation

Ventilation (3 AAC 306.370(d)(1)(B))

If you are proposing an indoor marijuana consumption area, where consumption by inhalation will occur you must be able to certify the statements below.

Read the following and then sign your initials in the box to the right: Initials

I certify that I have attached to this form ventilation plans that:

3.1 Show a ventilation system for the marijuana consumption area that is separate from the remainder of the retail store

3.2 Signed and approved by a licensed mechanical engineer.

3.3 Sufficient to remove visible smoke.

3.4 Consistent with all applicable building codes and ordinances.

Section 4 – Overconsumption

Monitoring Overconsumption (3 AAC 306.370(d)(1)(C))

4.1. Describe the policies and procedures that will be used to monitor overconsumption of marijuana or marijuana product:

Employees will be trained to monitor consumers for overconsumption. Customers who appear intoxicated prior to entry will not be permitted to enter the retail store or consumption area. In accordance to 3 AAC 306.370 customers will be limited per day to consuming 1 gram of flower, 25mg of edibles, and .3 grams of concentrates by vaping device. Employees will be trained to not sell more than the legal daily limit to each customer. No other concentrates will be consumed on the premises. Anyone who appears to have over-consumed will be asked to leave the premises, and will be assisted to a cab or ride share. Warnings including consumption area rules and limits will be posted in a conspicuous location in the consumption area.

Section 5 – Repackaging or Disposal

Repackaging or Disposal (3 AAC 306.370(d)(1)(D))

5.1. Describe how you will dispose of or repackage unconsumed marijuana or marijuana product in accordance with 3AAC 306.740 and 3AAC 306.345:

Any unconsumed marijuana will be repackaged in accordance with 3 AAC 306.345 and 3 AAC 306.470, and tracked accordingly. All unconsumed marijuana left abandoned or unclaimed in the marijuana consumption area will be destroyed in accordance with the operating plan and 3 AAC 306.740. Any marijuana waste will be made unusable by mixing it in equal parts with a compostable material. Customers who intend to take unconsumed marijuana home when they leave will do so with the product properly packaged and in a labeled exit bag.

AMCO received 5/14/2022

Section 6 – Prevention of Introduction

Prevention of Introduction (3 AAC 306.370(d)(1)(E))

6.1. Describe your policies and procedures to ensure marijuana from a source other than your retail marijuana store is not introduced to your consumption area:

Only products specifically designated to be consumed onsite may be purchased and consumed within the consumption area. Employees will be trained to monitor the consumption area for products not purchased specifically for onsite consumption. Any products found to not have been purchased that day specifically for onsite consumption will be confiscated and destroyed. Customers will be informed prior to entering the consumption area that only products purchased within the consumption area may be consumed onsite. Warning signs will also be posted in a conspicuous location to ensure customers remain informed of the consumption area requirements.

6.2 Describe your policies and procedures to ensure that marijuana from your retail marijuana store that is not intended for onsite consumption is not introduced into your consumption area:

Employees will be trained to inform customers prior to entering the consumption area that only products purchased specifically intended for onsite consumption may be consumed in the consumption area. Employees will monitor access into the consumption area to ensure customers are following the requirement. If customers purchase products in the retail store prior to entering the consumption area, employees will offer customers the option to have their products held behind the counter for them to claim after exiting the consumption area. No outside marijuana or marijuana products will be allowed on the premises at any time. Warning signs stating consumption area policies will be posted in a conspicuous location and provided to customers.

The point of sale system will track the sales in our retail store and consumption lounge separately. This will facilitate employees monitoring of marijuana product purchased in both areas and whether someone was trying to bring product purchased in the store into the Lounge.

Section 7 – Dosage and Safety Information

Written Materials (3 AAC 306.370(e)(4))

You must be able to certify the statement below. Read the following and then sign your initials in the box to the right: Initials

7.1- I certify that I have attached copies of the written materials to be provided in the consumption area(s) to patrons at no cost that contain marijuana dosage and safety information for each type of marijuana or marijuana product to be sold for consumption at the marijuana consumption area.

AMCO received 5/14/2022

Section 8 – Employee monitoring

Employee Monitoring (3AAC 306.370(c)(2))

Answer "Yes" or "No" to the following question:	Yes	No
8.1 Will consumption by smoking or vaping be allowed?	☑	☐

If "Yes", describe the smoke-free area from which employees will monitor the marijuana consumption area:

Employees will monitor customers from an separate observation room setup for video surveillance. Ventilation in the consumption area will be separate from the retail store and employee monitoring area. Employees will monitor customers for over consumption and prohibited activities from the smoke free employee monitoring area primarily utilizing video surveillance which covers all areas of the consumption area as well as all entrances and exits.

Section 9 – Declaration

I declare under penalty of unsworn falsification that this form, including all accompanying schedules and statements, is true, correct, and complete.

Signature of licensee

GWENDOLYN MURDOCK
Notary Public
State of Alaska
My Commission Expires Dec 26, 2022

Notary Public in and for the State of Alaska

Howard C. Hollister

Printed name of licensee

My commission expires: DEC 26, 2022

Subscribed and sworn to before me this 9 day of May, 2022.

AMCO received 5/14/2022

Form MJ-28b: Onsite Consumption Endorsement Operating Plan

(Additional Space as Needed):

Comment:

Pakalolo Supply Company was actively involved in the campaign to legalize marijuana in Alaska. We worked closely with Director Franklin and the legislature on the rules, regulations, and framework for the new industry. We were the first licensee in the State of Alaska. Our retail store made the first legal sale to a consumer in the State. Our store has operated professionally for over 5 1/2 years with superior customer service, in full compliance with state regulations, and without any legal incidents of any kind.

We have always intended to operate an on-site consumption area, and were one of the five retail licenses originally issued with consumption areas included although on-site consumption was not allowed at that time. Pakalolo has won multiple awards as the best retail marijuana store in our community, and in the State of Alaska. A member of the Fairbanks City Council has stated publicly on separate official occasions that she considers our company the gold standard for legal marijuana companies in our community.

These comments are made to assure AMCO and the Marijuana Control Board that we will operate our on-site consumption facility with the same professionalism and compliance to regulation as we have our Retail Marijuana Store and our Standard Marijuana Cultivation Facility. We have planned this operation for over 6 years, and will set the standard again for how other facilities should operate.

Pakalolo Supply Company
Write a description for your map.
AMCO received 5/14/2022
Legend
1851 Fox Ave
Pakalolo Supply Co
N64°50'48.48"
1851 Fox Ave
Pakalolo Supply Co
Fox Ave
Fox Ave
Fox Ave
Google Earth
Image Landsat / Copernicus
N
90 ft

AMCO received 5/14/2020

AMCS received 5/18/2022

AMCO received 5/14/2022

AMCO received 5/14/2022

AMCO received 5/14/2022

DUCTWORK SYMBOLS

DOUBLE LINE		SINGLE LINE
	EXISTING EQUIPMENT OR DUCTWORK TO BE REMOVED.	
	EXISTING DUCTWORK TO REMAIN	
	NEW DUCTWORK	
VD	MANUAL VOLUME DAMPER (MVD) MOTOR OPERATED DAMPER (MOD)	VD
AD	ACCESS DOOR	AD
AD	RADIUS ELBOW (R=1.5)	
	VANED ELBOW	
	BRANCH DUCT TAKE-OFF	
D R	RISE OR DROP DIRECTION OF AIR FLOW	D R
	FLEXIBLE CONNECTION	
SIZE CFM/BLOW	DIFFUSER	SIZE CFM/BLOW
SIZE CFM	CEILING RETURN/EXHAUST GRILLE	SIZE CFM
SD-X NUMBER XX CFM	SUPPLY AIR DIFFUSER	SD-X NUMBER XX CFM
RG-X NUMBER XX CFM	RETURN AND/OR EXHAUST AIR GRILLE	RG-X NUMBER XX CFM

	BACKDRAFT DAMPER		FIRE DAMPER
M	MOTORIZED DAMPER		SUPPLY AIR
DP	FILTER/DP SENSOR		RETURN OR EXHAUST AIR
	COIL		OUTSIDE AIR

HVAC REFERENCE SYMBOLS

- BB-1 (X' X): EQUIPMENT IDENTITY (SEE EQUIPMENT ABBREVIATION LIST AND SCHEDULES); EQUIPMENT NUMBER; GPM; LENGTH
- B / 1: EQUIPMENT NUMBER
- X / X: INDICATES DETAIL, PLAN, SECTION, AND/OR DIAGRAM(APPLIES ONLY WHERE INDICATED ON DRAWINGS); INDICATES DRAWING ON WHICH DETAIL APPEARS
- TYP / X: INDICATES TYPICAL DETAIL (APPLIES TO ALL CONTRACT DRAWINGS); INDICATES DRAWING ON WHICH DETAIL APPEARS
- X / X: INDICATES SECTION NUMBER; INDICATES ON WHICH DRAWING SECTION APPEARS
- X: INDICATES REVISION & NUMBER
- CONNECT NEW TO EXISTING
- #: SHEET NOTE NUMBER

NOTE: SYMBOLS SHOWN IN LEGEND DO NOT NECESSARILY APPEAR ON DRAWINGS.

PIPE LINETYPES

DCW	W-UF
DHW	HWS,GHS
DHWC	HWR,GHR
VENT	FOS
W	GAS

PIPING ELEMENTS/VALVING

- GATE VALVE
- GLOBE VALVE
- BALL VALVE
- SWING CHECK VALVE
- LIFT CHECK VALVE
- GATE VALVE, ANGLE
- GLOBE VALVE, ANGLE
- CBV: AUTOMATIC FLOW CONTROL VALVE
- CIRCUIT SETTING BALANCING VALVE
- THREE WAY CONTROL VALVE
- TWO WAY CONTROL VALVE
- S: SOLENOID VALVE
- PRESSURE REDUCING VALVE (PRV)
- TPV: TEMPERATURE/PRESSURE RELIEF VALVE
- RELIEF/SAFETY VALVE
- BACKFLOW PREVENTOR (REDUCED ZONE)
- BACKFLOW PREVENTOR (DOUBLE CHECK VALVE ASSEMBLY)
- GAS COCK
- GAS PRESSURE REGULATOR
- VALVE IN RISE OR DROP
- HOSE BIBB
- STRAINER
- STRAINER WITH BLOW OFF VALVE
- BASKET STRAINER
- AUTOMATIC AIR VENT (EXTEND DISCHARGE TO DRAIN)
- MV: MANUAL AIR VENT
- DIRECTION OF FLOW
- R D: DIRECTION OF PITCH-RISE OR DROP
- PIPE RISING UP
- PIPE DROPPING DOWN
- UNION - SCREWED OR FLANGED
- CONCENTRIC REDUCER
- ECCENTRIC REDUCER
- ELECTRICALLY TRACED PIPING
- VB: VACUUM BREAKER
- WATER HAMMER ARRESTER
- RD: ROOF DRAIN
- FD: FLOOR DRAIN
- CO: CLEANOUT
- CO: CLEANOUT (PLAN VIEW)
- PUMP
- H W: EXPANSION LOOP (WxH)
- FLEXIBLE-CONNECTION
- A: ANCHOR
- G: GUIDE
- EJ: EXPANSION JOINT
- TT: TEMPERATURE SENSOR
- TT: SPACE TEMPERATURE SENSOR
- FG: FLAMMABLE GAS OR VAPOR SENSOR (BY OTHERS)
- TT: DUCT AVERAGING TEMPERATURE SENSOR
- PT/PS: PRESSURE SENSOR OR PRESSURE SWITCH
- THERMOMETER
- GAUGE WITH GAUGE COCK/ PRESSURE INDICATOR
- CO: WALL CLEAN OUT

AIR OUTLET SCHEDULE

EQP TAG	USE	UNIT SIZE (IN)	NECK SIZE (IN)	MAX CFM	THROW (FT)	PATTERN	SP (IN WG)	NC	FINISH	BASIS OF DESIGN MFR	BASIS OF DESIGN MODEL	NOTES
RG-1	RETURN	36X14	36X14	3220	-	-	0.15	35	ALUM.	TITUS	50F	1
SD-2	SUPPLY	30X12	30X12	1832	-	STRAIGHT	0.08	34	ALUM.	TITUS	S301FL	2

NOTES
1. CEILING-MOUNTED.
2. DUCT MOUNTED WITH AIRFLOW STRAIGHT DOWN.

PLUMBING FIXTURE CONNECTION SCHEDULE

EQP TAG	FIXTURE	TRAP	WASTE	VENT	CW	HW	BASIS OF DESIGN MFR	BASIS OF DESIGN MODEL	NOTES
FD-1	FLOOR DRAIN	2"	2"	1-1/2"	-	-	-	-	1
FS-1	FLOOR SINK	2"	2"	1-1/2"	-	-	CECO 12X12X6	-	2
SS-1	SCULLERY SINK	2"	2"	1-1/2"	1/2"	1/2"	-	-	3
HS-1	HAND SINK	1-1/2"	1-1/2"	1-1/4"	1/2"	1/2"	-	-	4
PS-1	PREP SINK	-	2"	-	1/2"	1/2"	-	-	5

NOTES
1. COMMERCIAL IRON BODY 5" FLOOR DRAINS.
2. PROVIDE GRID OR FUNNEL TO ENSURE MIN.1" AIR GAP.
3. PROVIDE FISHER MODEL 13250 FAUCET WITH SPOUT LENGTH TO REACH ALL BOWLS WITH MINIMUM 3-INCH CLEAR.
4. PROVIDE GRID DRAIN, LEVER HANDLE FAUCET WITH LIMIT STOP, THERMAL PIPE PROTECTION AND WALL SUPPORT.
5. PROVIDE FAUCET WITH HAND SPRAYER HOSE, INDIRECT DRAIN TO FLOOR SINK.

VENTILATION DESIGN CRITERIA

ROOM NUMBER	ROOM NAME	OCCUPANCY CLASSIFICATION	AREA (SF)	OCCUPANT DENSITY, #/1000SF	EXPECTED OCCUPANTS	OUTSIDE AIR CFM/SF	OUTSIDE AIR CFM/PERSON	OUTSIDE AIR REQ'D (CFM)	OUTSIDE AIR ACTUAL (CFM)	EXHAUST AIR CFM/SF	EXHAUST AIR REQ'D (CFM)	EXHAUST AIR ACTUAL (CFM)	BASIS OF DESIGN	NOTES
-	CONSUMPTION	SMOKING LOUNGE	868	70	61	0.00	60	3660	3050	-	3843	3203	2018 IMC CH 4	

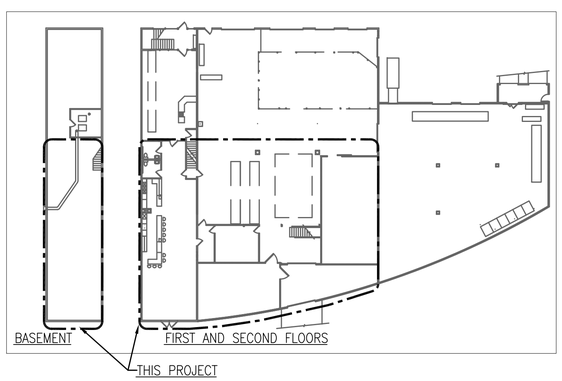

N

2 / M1 KEY PLAN
1/32" = 1'-0"

ABBREVIATIONS

DCW	DOMESTIC COLD WATER
DHW	DOMESTIC HOT WATER
DHWC	DOMESTIC HOT WATER CIRC.
(E)	EXISTING
FOR	FUEL OIL RETURN
FOS	FUEL OIL SUPPLY
GHR	GLYCOL HEATING RETURN
GHS	GLYCOL HEATING SUPPLY
GLHE	GROUND LOOP HEAT EXCHANGER
HWR	HEATING WATER RETURN
HWS	HEATING WATER SUPPLY
THW	TEMPERED HOT WATER
UF	UNDER FLOOR
V	VENT
VTR	VENT THROUGH ROOF
W	WASTE

NOTE: NOT ALL ABBREVIATIONS APPEAR ON DRAWINGS.

STATE OF ALASKA 49TH HELENA BRETAS RUETER ME-10190 04.28.2022 REGISTERED PROFESSIONAL ENGINEER

RUETER ENGINEERING
MECHANICAL DESIGN AND CONSULTING SERVICES
(907)374-1688
helena@hbrueter.com
P.O. BOX 83585 FAIRBANKS AK 99708

SYMB	DATE	REVISION	BY

PROJECT:
PAKALOLO SUPPLY CO.
ON-SITE CONSUMPTION AREA
1851 FOX AVENUE
FAIRBANKS, ALASKA

SHEET CONTENTS:
MECHANICAL
KEY PLAN
LEGEND AND SCHEDULES

DRAWN		HBR
DRAWN		HBR
CHECKED		HBR
DATE	04/28/2022	

SHEET NUMBER:
M001

HBR W.O. NUMBER: 2113

AMCO received 5/14/2022

SPECIFICATIONS

General

A. Contractor shall furnish and install all materials, equipment, and supervision necessary for a complete installation of the mechanical system as shown on the Drawings and as herein specified.
B. Contractor shall comply with local and state governing regulations and be responsible for obtaining and paying for all licenses and permits.
C. The mechanical work shall be in conformance with the State of Alaska Building and Mechanical Codes, and all local codes and regulations. Upon completion of the project, Contractor shall provide Owner with certificates of Department of Labor, State of Alaska, local office.
D. Contractor shall receive and store equipment upon delivery to ensure good working condition. If equipment is damaged due to shipment, Contractor shall immediately take appropriate action to correct the situation at no additional cost to Owner.
E. Contractor shall submit electronic copies of product data, certificates, and warranties to Owner within 30 days of notice to proceed. Provide submittals for equipment shown in the equipment schedules on the Drawings.
F. Contractor shall install equipment in accordance with manufacturer's instructions and recommendations, and shall notify Engineer immediately when there are conflicts with the Drawings.
G. Contractor shall provide a one-year warranty on all materials and workmanship.

Electrical Wiring

A. Electrical wiring, including distribution panels, cabinets, supports, feeders, circuit wiring, motor disconnects, and related items; and electrical connections to equipment, fixtures, and devices shall be provided by the Electrical Contractor unless specifically called for by the Mechanical Contractor.
B. Electrical Contractor shall furnish and install all wiring and conduit to and from the equipment that is provided by the Mechanical Contractor.
C. All electrical wiring provided as part of the mechanical equipment shall meet the requirements of the current edition of the NEC.

Mechanical Work Close-out

A. Do not proceed with the transfer of the mechanical system to the Owner for operation until guarantees, warranties, performance certifications, maintenance agreements, and similar commitments to be signed by the Contractor and others have been executed and transmitted to the Owner.
B. After complete installation of equipment and before any test runs are carried out, Contractor shall lubricate equipment in accordance with the manufacturer's instructions and change all filters. Contractor shall provide one extra change of filters to the Owner.
C. After cleaning of the construction area is complete, the Contractor shall thoroughly clean all equipment to remove construction dust and dirt. Repair scratches or mars using paint from the manufacturer to match the equipment.
D. Contractor shall operate the entire installation for at least one week or for a period of time the Engineer deems necessary, to ensure correct operation. During this time, Contractor shall instruct Owner or his representative in the operation and maintenance of the mechanical systems.
E. Contractor shall provide operating instructions, repair parts list, equipment manuals and automatic control diagrams to the Owner.
F. During the first year of operation, make two complete inspections of the mechanical system, making any adjustments required, and provide a report to Owner describing actions taken.

Equipment

A. Mechanical equipment shall be as scheduled on Drawings, or an accepted equal meeting the scheduled specifications.
B. Install equipment to allow maximum possible headroom unless specific mounting heights are indicated.
C. Install equipment level and plumb, parallel and perpendicular to other building systems and components, unless otherwise indicated.
D. Install mechanical equipment to facilitate service, maintenance, and repair or replacement of components. Connect equipment for ease of disconnecting, with minimum interference to other installations. Extend grease fittings to accessible locations.
E. Install equipment to allow right of way for piping installed at required slope.

Insulation – General

A. Mastics, sealants, and adhesives shall be UL listed. Insulation shall have composite flame hazard classification not exceeding Flame Spread 25, Smoke Developed 50, and Fuel Contributed 50 when tested in accordance with procedures of UL Standard 723, and shall meet requirements of ASTM-84 and NFPA 255.
B. Insulation shall not be applied until all services are free of dirt, dust, grease, frost, moisture, and other imperfections.
C. Install insulation continuously through walls and partitions. Seal penetrations. Comply with architect's accepted through-penetration fire stop systems when walls or partitions are fire-rated.
D. For below-ambient service, install a continuous unbroken vapor barrier. Seal longitudinal seams, end joints, and protrusions with a water based vapor-barrier mastic and joint sealant, suitable for indoor and outdoor use on below ambient services.

Duct and Equipment Insulation

A. Outside air intake duct work from the intake to the air handling unit or to the first control damper, and the last 10 feet of exhaust air duct work before the air outlet, shall be insulated with 1-1/2-inch-thick mineral fiber board or mineral fiber pipe and tank insulation with factory-applied ASJ. Nominal density shall be 2.5 lb/cu. ft. or more. Thermal conductivity (k-value) at 100 deg F shall be 0.29 Btu x in./h x sq. ft. x deg F or less.
B. Insulation shall be applied to cover all exterior surfaces of ductwork and sealed tightly to prevent leakage. Secure with insulation pins and Mineral-Fiber Adhesive: Comply with MIL-A-3316C, Class 2, Grade A.
C. Insulation for rectangular ducts shall be Mineral-Fiber Board Insulation: Comply with ASTM C 612, Type IA or Type IB.
D. Insulation for round ducts shall be Mineral-Fiber, Pipe and Tank Insulation: Comply with ASTM C 1393, Type II or Type IIIA Category 2, or with properties similar to ASTM C 612, Type IB.
E. Equipment insulation shall be as in items C. or D. above depending on the shape of the equipment.
   1. Insulate equipment if/as noted on the Drawings.

Pipe insulation

A. Pipe insulation for colder-than-ambient service shall be flexible elastomeric: Closed-cell, sponge- or expanded-rubber materials. Comply with ASTM C 534, Type I for tubular materials and Type II for sheet materials. Adhesive: Comply with MIL-A-24179A, Type II, Class I.A. Pipe insulation for warmer-than-ambient service shall be Mineral-Fiber, Preformed Pipe Insulation: Comply with ASTM C 547, Type I, Grade A, with factory-applied ASJ. Cover fitting insulation with one-piece PVC covers.
B. NPS 1 and smaller: insulation shall be ½ inch thick.
C. NPS 1-1/4 to 2: insulation shall be 1 inch thick.
D. NPS 2-1/2 and larger: insulation shall be 1-1/2 inches thick.
E. Pressure test piping before installing insulation.

Pipe Supports and Seismic Restraint

A. Hanger and Pipe Attachments: Factory fabricated with galvanized coatings; nonmetallic coated for hangers in direct contact with copper tubing.
B. Install hangers and supports to allow controlled thermal and seismic movement of piping systems.
C. Install powder-actuated fasteners and mechanical-expansion anchors in concrete after concrete is cured. Do not use in lightweight concrete or in slabs less than 4 inches thick.
D. Load Distribution: Install hangers and supports so piping live and dead loading and stresses from movement will not be transmitted to connected equipment.

Pipe and Fittings – General

A. Install piping free of sags and bends.
B. Install fittings for changes in direction and branch connections.
C. Install sleeves for pipes passing through concrete and masonry walls, gypsum board partitions, and concrete floor and roof slabs.
D. Comply with architect's requirements for sealing pipe penetrations in fire-rated construction.
E. Install unions at final connection to each piece of equipment.
F. Install dielectric coupling and nipple fittings to connect piping materials of dissimilar metals in water piping.

General Duty Valves

A. Valve Sizes: Same as upstream piping unless otherwise indicated.
B. NSF Compliance: NSF 61 for valve materials for potable-water service.
C. Valves in Insulated Piping: With 2-inch stem extensions.
D. End Connections: Threads shall comply with ANSI B1.20.1. Flanges shall comply with ANSI B16.1 for cast-iron valves and with ANSI B16.24 for bronze valves. Solder-joint connections shall comply with ANSI B16.18.
E. Two-Piece, Copper-Alloy Ball Valves: Bronze body with full-port, chrome-plated bronze ball; PTFE or TFE seats; and 600-psig minimum CWP rating and blowout-proof stem.
F. Bronze, Swing Check Valves: Class 125, bronze body with nonmetallic disc and seat.
G. Use ball valves for shutoff and throttling duty.
H. Locate valves for easy access and provide separate support where necessary.
I. Install valves for each fixture and item of equipment.
J. Install three-valve bypass around each pressure-reducing valve using throttling-type valves.
K. Install valves in horizontal piping with stem at or above center of pipe.
L. Install valves in a position to allow full stem movement.
M. Install check valves for proper direction of flow in horizontal position with hinge pin level.

Domestic Water Piping Specialties

A. Pipe-Applied, Atmospheric Vacuum Breakers: ASSE 1001, with floating disc and atmospheric vent.
B. Hose Connection Vacuum Breakers: ASSE 1011, rough bronze, with nonremovable and manual drain features and garden-hose threaded connection.
C. Double-Check Assembly Backflow Preventers: ASSE 1013.
D. Water Regulators: ASSE 1003.
E. Balancing Valves: MSS SP-110 for two-piece, copper-alloy ball valves, with memory stop.
F. Thermostatic Mixing Valves: Manually adjustable, bronze body. Include check stop and union on hot- and cold-water-supply inlets.
G. Water Hammer Arrester: Bellows or piston type with pressurized cushioning chamber.
H. Strainers: Y-pattern, bronze body, 125-psig minimum steam working pressure.
I. Water Filters: Cartridge type, including housing, fittings, filter cartridges, and cartridge end caps

Heating and Domestic Water, Condensate and Safety Relief Valve Piping 2 Inches and Smaller

A. Joining Materials: Use ASTM B 813, water-flushable, lead-free flux; ASTM B 32, lead-free-alloy solder.
B. Fittings: ASME B16.22 wrought-copper, solder-joint fittings.
C. Aboveground: Hard Copper Tubing: ASTM B 88, Type L, water tube, drawn temper, or PEX plastic as described below and NSF 61 approved (DCW, DHW only).
D. Copper Unions: Cast-copper-alloy, hexagonal-stock body, with ball-and-socket, metal-to-metal seating surfaces and solder-joint or threaded ends.
E. Underground: Soft Copper Tubing: ASTM B 88, Type K, water tube, annealed temper.
F. Underground: PE, ASTM Pipe: ASTM D 2239, SIDR No. 5.3, 7, or 9; with PE compound number required to give pressure rating not less than 160 psig. Molded PE Fittings: ASTM D 3350, PE resin, socket- or butt-fusion type, made to match PE pipe dimensions and class.

Sanitary Waste and Vent Piping

A. Minimum Pressure Requirement for Soil, Waste, and Vent: 10-foot head of water.
B. Comply with NSF 14, "Plastic Piping Components and Related Materials," for plastic piping components.
C. PVC Plastic, DWV Pipe and Fittings: ASTM D 2665, Schedule 40, plain ends with PVC socket-type, DWV pipe fittings.
G. Make changes in direction for soil and waste drainage and vent piping using appropriate branches, bends, and long-sweep bends. Sanitary tees and short-sweep 1/4 bends may be used on vertical stacks if change in direction of flow is from horizontal to vertical. Use long-turn, double Y-branch and 1/8-bend fittings if 2 fixtures are installed back to back or side by side with common drain pipe. Straight tees, elbows, and crosses may be used on vent lines. Do not change direction of flow more than 90 degrees. Use proper size of standard increasers and reducers if pipes of different sizes are connected. Reducing size of drainage piping in direction of flow is prohibited.
H. Lay buried building drainage piping beginning at low point of each system. Install true to grades and alignment indicated, with unbroken continuity of invert. Place hub ends of piping upstream. Install required gaskets according to manufacturer's written instructions for use of lubricants, cements, and other installation requirements. Maintain swab in piping and pull past each joint as completed.
I. Install soil and waste drainage and vent piping at the following minimum slopes, unless otherwise indicated:
   1. Building Sanitary Drain: 2 percent downward in direction of flow for piping NPS 3 and smaller; 1 percent downward in direction of flow for piping NPS 4 and larger.
   2. Horizontal Sanitary Drainage Piping: 2 percent downward in direction of flow.
   3. Vent Piping: 1 percent down toward vertical fixture vent or toward vent stack.
I. Install PVC soil and waste drainage and vent piping according to ASTM D 2665.
J. Install underground PVC soil and waste drainage piping according to ASTM D 2321.
   4. Do not enclose, cover, or put piping into operation until it is inspected and approved by authorities having jurisdiction.

Duct Work

A. Galvanized-Steel Sheet: ASTM A 653/A 653M, with G60 hot-dip galvanized coating, except as described below for hazardous exhaust.
B. Joint and Seam Tape, and Sealant: Comply with UL 181A.
C. Rectangular Metal Duct Fabrication: Comply with SMACNA's "HVAC Duct Construction Standards – Metal and Flexible."
I. Seal ducts to the following seal classes according to SMACNA's "HVAC Duct Construction Standards – Metal and Flexible":
J Conditioned Space, Supply-Air Ducts in Pressure Classes 2-Inch wg and Lower: Seal Class C.
K. Conditioned Space, Exhaust Ducts: Seal Class B.
L. Conditioned Space, Return-Air Ducts: Seal Class C.
N. Avoid passing through electrical equipment spaces and enclosures.
O. Support ducts to comply with SMACNA's "HVAC Duct Construction Standards – Metal and Flexible," Ch. 4, "Hangers and Supports."
P. Install duct accessories according to applicable details in SMACNA's "HVAC Duct Construction Standards – Metal and Flexible" for metal ducts and in NAIMA AH116, "Fibrous Glass Duct Construction Standards," for fibrous-glass ducts.
Q. Clean new and existing duct system(s) before testing, adjusting, and balancing.

Duct Accessories

A. Flexible Connectors: Flame-retarded or noncombustible fabrics, coatings, and adhesives complying with UL 181, Class 1.

Controls

A. Line voltage wiring through starters and safety switches to equipment shall be provided by the Electrical Contractor. All remaining electrical work including low-voltage wiring and/or accessories required for the complete system shall be furnished by the Mechanical Contractor.
B. Thermostats shall be mounted 5'-0" above finished floor and where shown on Drawings. Thermostats shall include locking covers.
C. Controls shall perform according to their Sequence of Operations:
   1. Boiler B-1, -2 (existing): Boiler fires as needed to maintain GHS temp set point, initially set to 160 degF. Option to provide OAT reset function. Circulating pump CP-1, furnished with the boiler package, is on when there is a call for heat. No change expected to existing sequence.
   2. HC-1 and PHC-1: HRV-1 packaged Controller (Johnson Penn System 450 or similar) located in Mech Room adjacent to HRV-1 modulates CP-2, to maintain an exhaust air temperature above freezing, and CP-3 to maintain a space temperature set point. User sets the space temperature (adjustable from 50 degF to 70 degF) at the controller. Coils are connected primary/secondary with hottest GHS serving HC-1.
   3. HRV-1: User sets the occupancy schedule for HRV-1 at a remote control panel located in the Mech Room. it shall also be possible to override the programmed schedule when necessary. When scheduled or manually overridden, the outside air and exhaust air dampers open. HRV-1 supply and exhaust fans then turn on at the minimum stable airflow available, (1000 cfm, adjustable) or as determined during commissioning. The HRV supply fan speed shall increase as necessary to satisfy the space CO2 set point (900 ppm, adjustable) as measured by a return duct CO2 sensor. The return fan modulates together with the supply fan. Packaged HRV control also opens a bypass damper to bypass the plate HX when outside air temperature is above 50 degF, adjustable. During unoccupied periods, HRV-1 operates in recirculation mode at minimum speed, and modulates HC-1 pump CP-2, described above, to satisfy space temerature set point.
   4. existing toilet room exhaust: User sets the occupancy schedule for RR xxx. ASHRAE recommends 24/7 operation for toilet room ventilation, and providing lids for water closets with signage directing the user to close the lid before flushing.
      4.1. If an HRV is used: When scheduled, the HRV is on. Packaged control turns on the recirculation defrost cycle as determined by the outdoor air temperature and an internal timer. During the defrost cycle the outdoor air damper is closed and the recirculation air damper is open, and the exhaust fan is off.

Testing, Adjusting, and Balancing

A. Test and balance air volumes delivered through each air inlet and outlet. Testing shall be done with approved, properly calibrated testing devices. Balance and adjust the air distribution systems to provide air flows as shown on Drawings.
B. Ensure and record correct fluid flows at coil and manifold AFCV's.
C. Performance of this work shall be in accordance with the recommendations, procedures and standards as described in the Manual for Balancing and Adjustment of Air Distribution Systems, latest edition, published by SMACNA. Report shall be made on the recommended SMACNA forms. A copy of the testing and balancing report shall be submitted to the Owner for approval.

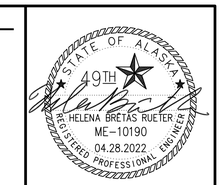

MECHANICAL DESIGN AND CONSULTING SERVICES
(907)374-1688
RUETER ENGINEERING
helena@hbrueter.com
P.O. BOX 83585 FAIRBANKS AK 99708

SYMB	DATE	REVISION	BY

PROJECT:
PAKALOLO SUPPLY CO.
ON-SITE CONSUMPTION AREA
1851 FOX AVENUE
FAIRBANKS, ALASKA

SHEET CONTENTS:
MECHANICAL SPECIFICATIONS

DRAWN		HBR
DRAWN		HBR
CHECKED		HBR
DATE	04/28/2022	

SHEET NUMBER:
M002

HBR W.O. NUMBER: 2113

AMCO received 5/14/2022

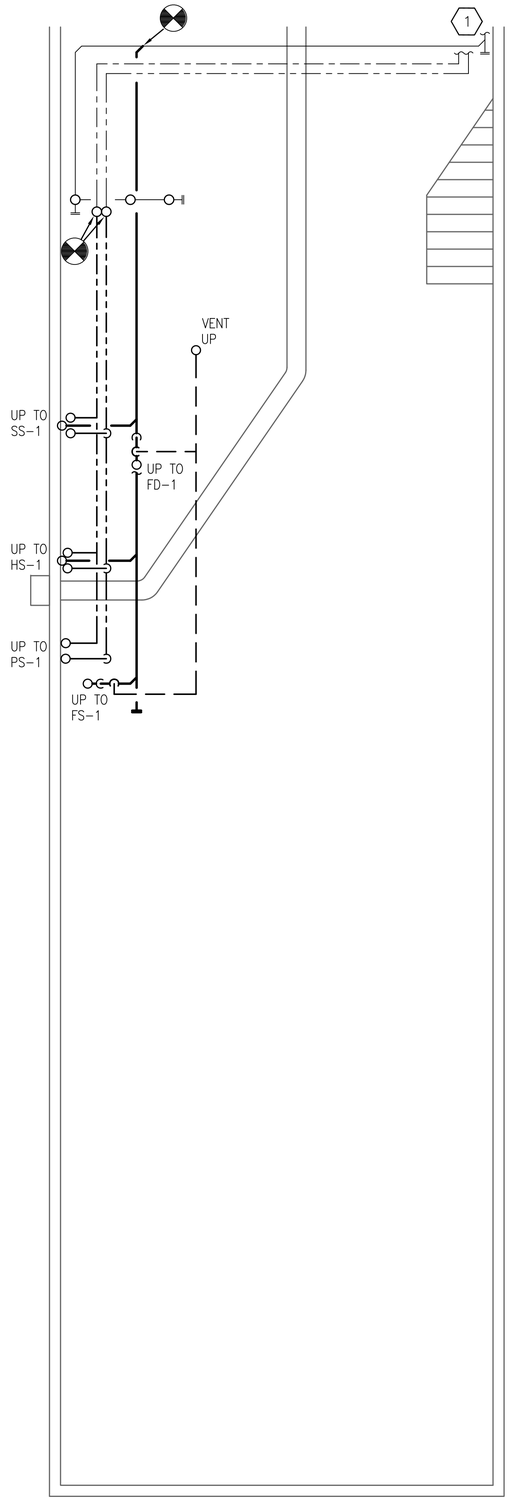

N

1 M101 BASEMENT MECHANICAL PLAN

1/4" = 1'-0"

1/4"=1'-0" FULL SIZE

0' 2' 4' 8'

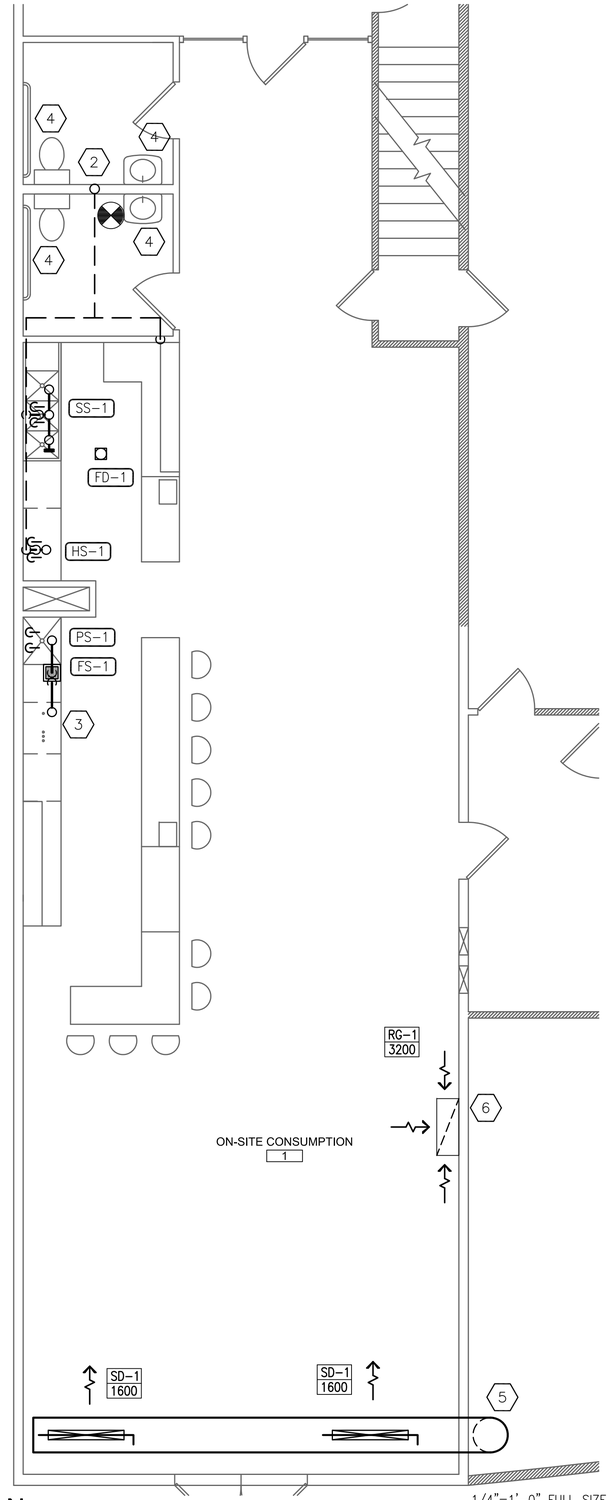

N

2 M101 FIRST FLOOR MECHANICAL PLAN

1/4" = 1'-0"

1/4"=1'-0" FULL SIZE

0' 2' 4' 8'

GENERAL NOTES

1. FOR PLUMBING PIPE SIZES SEE RISER DIAGRAMS THIS SHEET.
2. COORD W OWNER FOR USE OF EACH SINK. FOR PREP SINK IN CONTACT WITH FOOD PROVIDE INDIRECT WASTE PER 2018 UPC 801.2.3. FOR SCULLERY SINK PROVIDE ADJACENT FLOOR DRAIN PER 2018 UPC 704.3.
3. USE ROUND DUCT SIZES SHOWN OR EQUIVALENT FREE AREA RECTANGULAR DUCT.
4. NOT ALL DUCT TRANSITIONS AND OFFSETS ARE SHOWN. FIELD VERIFY ROUTING.

SHEET NOTES

1. EXISTING PLUMBING TO MECHANICAL ROOM.
2. CONNECT NEW 2" VENT TO EXISTING VTR. FIELD VERIFY VTR SIZE IS ADEQUATE FOR NEW FIXTURE COUNT.
3. TAP AREA AND ICE MACHINE DCW SUPPLY AND W TO FS-1, SEE 3/M201.
4. EXISTING PLUMBING FIXTURE TO REMAIN.
5. 22"ø UP, FOR CONTINUATION SEE SHEET M102.
6. 36X14 EXHAUST DUCT UP, FOR CONTINUATION SEE SHEET M102.

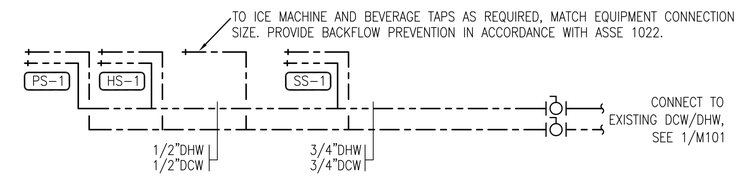

3 M101 DOMESTIC WATER RISER DIAGRAM

SCALE: NONE

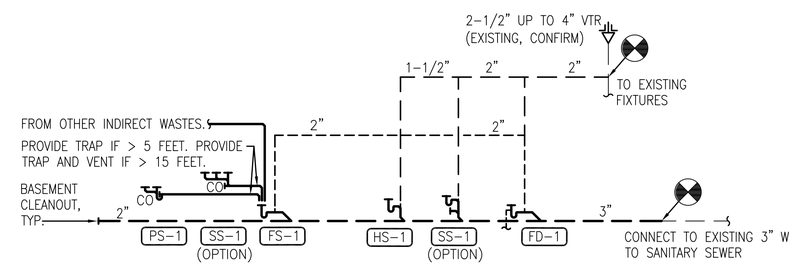

NOTE: 1. REFER TO PLUMBING FIXTURE CONNECTION SCHEDULE FOR PIPE SIZES TO FIXTURES.
2. SS-1 WASTE INDIRECT TO FS-1 IF CONTACT WITH FOOD IS POSSIBLE. IF SCULLERY ONLY, PROVIDE DOWNSTREAM FD-1 AND WASTE ACCORDING TO 2018 UPC 704.3.

4 M101 WASTE AND VENT RISER DIAGRAM

SCALE: NONE

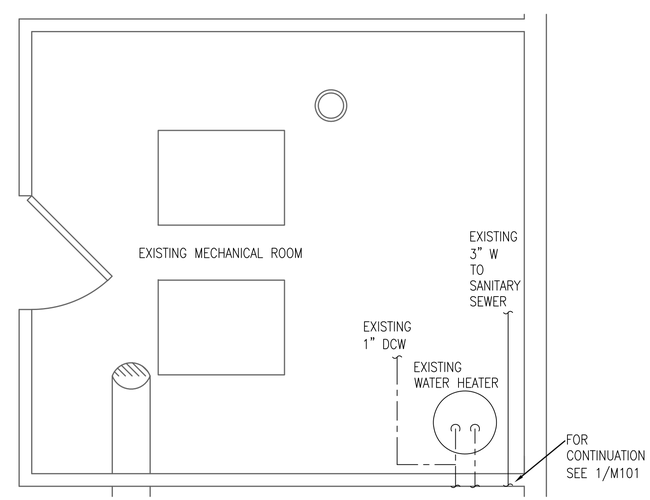

N

5 M101 ENLARGED BOILER ROOM PLAN

1/2" = 1'-0"

1/2"=1'-0" FULL SIZE

0' 1' 2' 4'

STATE OF ALASKA 49TH
HELENA BRETAS RUETER
ME-10190
04.28.2022
REGISTERED PROFESSIONAL ENGINEER

MECHANICAL DESIGN AND CONSULTING SERVICES
(907)374-1688
RUETER ENGINEERING
helena@hbrueter.com
P.O. BOX 83585 FAIRBANKS AK 99708

SYMB	DATE	REVISION	BY

PROJECT:

PAKALOLO SUPPLY CO.
ON-SITE CONSUMPTION AREA
1851 FOX AVENUE
FAIRBANKS, ALASKA

SHEET CONTENTS:

MECHANICAL PLANS

DRAWN		HBR
DRAWN		HBR
CHECKED		HBR
DATE	04/28/2022	

SHEET NUMBER:

M101

HBR W.O. NUMBER: 2113

AMCO received 5/14/2022

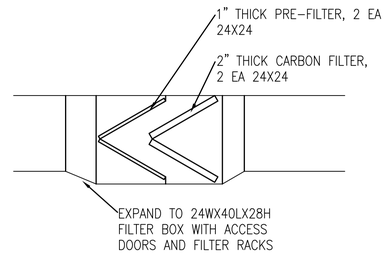

N

2 / M102 ENLARGED SECTION AT FILTER

1/2" = 1'-0"

1/2"=1'-0" FULL SIZE

0' 1' 2' 4'

GENERAL NOTES

1. USE ROUND DUCT SIZES SHOWN OR EQUIVALENT FREE AREA RECTANGULAR DUCT.
2. NOT ALL DUCT TRANSITIONS AND OFFSETS ARE SHOWN. FIELD VERIFY ROUTING.

SHEET NOTES.

1. FILTER SECTION WITH PRE-FILTERS CAMFIL FARR 30/30, AND CITISORB CARBON FILTERS (OR ACCEPTED EQUAL FILTERS) DETAIL THIS SHEET.
2. VOLUME DAMPERS WITH KNOB OR LEVER FOR MANUAL ADJUSTMENT/SELECTION OF MAKEUP AIR SOURCE.
3. EXISTING EXHAUST FAN, APPROX 3800 CFM, FIELD VERIFY AIR FLOW DURING COMMISSIONING.
4. EXISTING AIR INTAKE MANIFOLD, FIELD VERIFY DIMENSIONS.
5. TRANSITION TO EXISTING FAN INLET.
6. 36X14 DOWN TO RG-1, FOR CONTINUATION SEE SHEET M101.
7. 22"ø DOWN TO LOUNGE AREA CEILING, FOR CONTINUATION SEE SHEET M101.
8. EXISTING WALL VENT TO REMAIN.

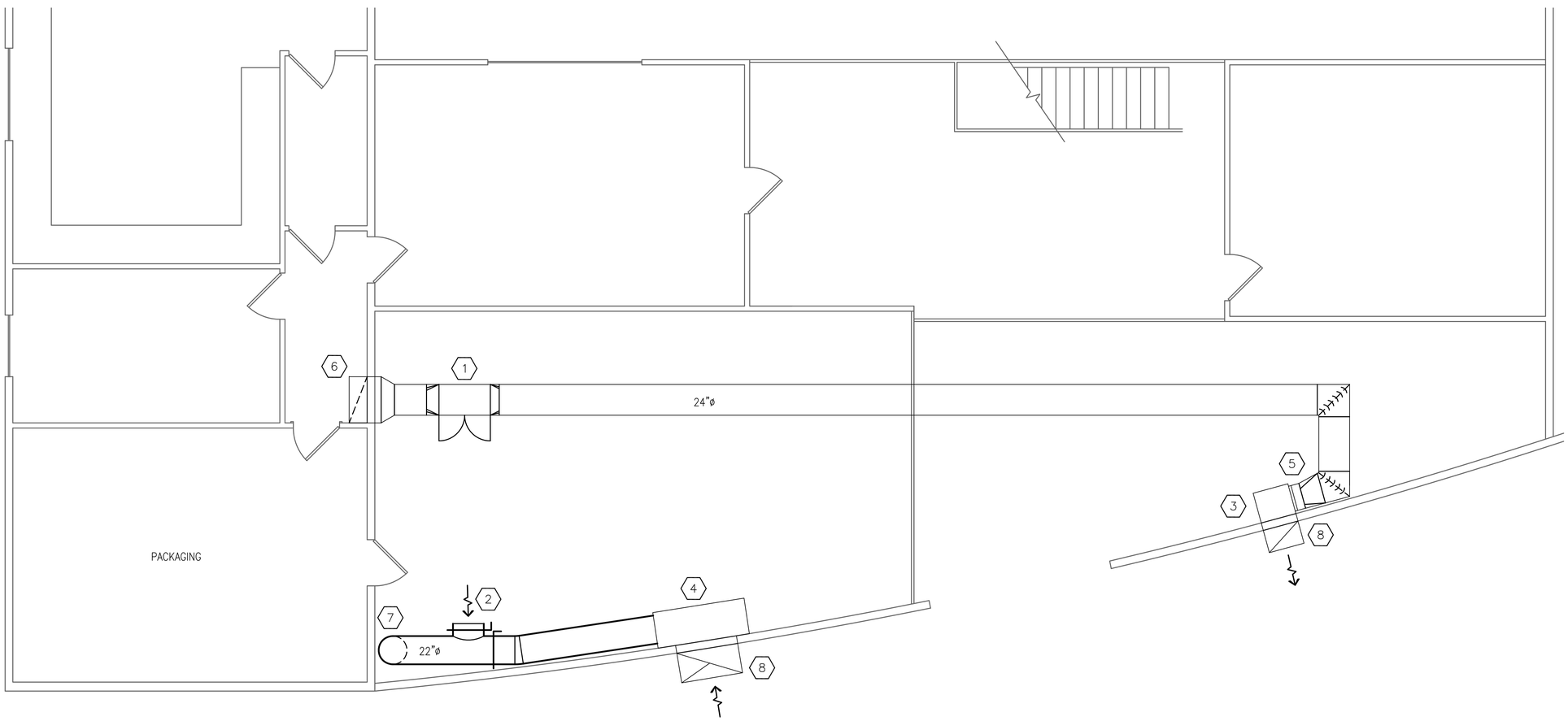

N

1 / M102 SECOND FLOOR MECHANICAL PLAN

1/4" = 1'-0"

1/4"=1'-0" FULL SIZE

0' 2' 4' 8'

STATE OF ALASKA 49TH HELENA BRETAS RUETER ME-10190 04.28.2022 REGISTERED PROFESSIONAL ENGINEER

MECHANICAL DESIGN AND CONSULTING SERVICES
(907)374-1688
RUETER ENGINEERING
helena@hbrueter.com
P.O. BOX 83585 FAIRBANKS AK 99708

SYMB	DATE	REVISION	BY

PROJECT:

PAKALOLO SUPPLY CO.
ON-SITE CONSUMPTION AREA
1851 FOX AVENUE
FAIRBANKS, ALASKA

SHEET CONTENTS:

MECHANICAL PLANS

DRAWN		HBR
DRAWN		HBR
CHECKED		HBR
DATE	04/28/2022	

SHEET NUMBER:

M102

HBR W.O. NUMBER: 2113

AMCO received 5/14/2022

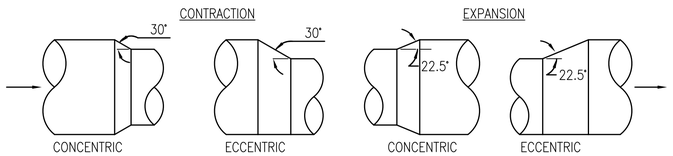

NOTE: PROVIDE SAME MAX ANGLES OF CONTRACTION AND EXPANSION FOR ROUND-TO-RECTANGULAR TRANSITIONS.

5 / M201 DETAIL: DUCT BRANCH
SCALE: NONE

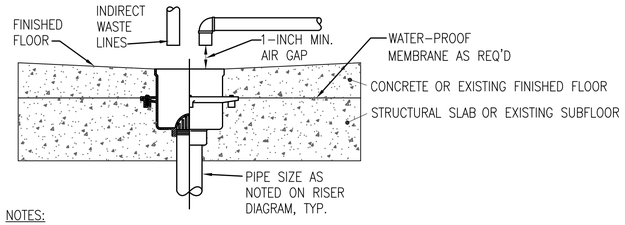

NOTES:

1. INDIRECT WASTE PIPING EXCEEDING 5 FEET IN LENGTH SHALL BE TRAPPED. DEVELOPED LENGTH SHALL NOT EXCEED 15 FEET.
2. TRAP AND VENT SIMILAR TO FLOOR DRAIN.

1 / M201 DETAIL: FLOOR SINK
SCALE: NONE

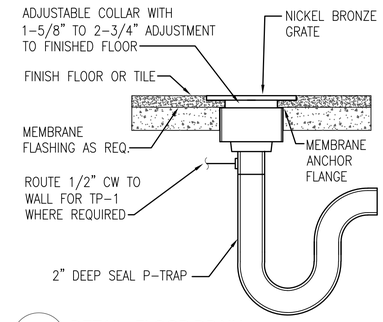

2 / M201 DETAIL: FLOOR DRAIN
SCALE: NONE

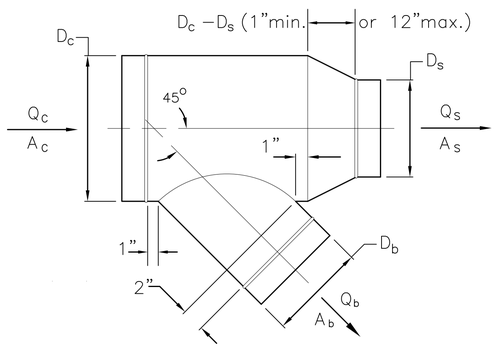

6 / M201 DETAIL: DUCT BRANCH
SCALE: NONE

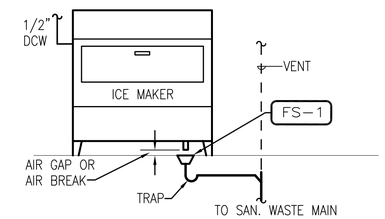

3 / M201 DETAIL: ICE MACHINE INDIRECT WASTE
SCALE: NONE

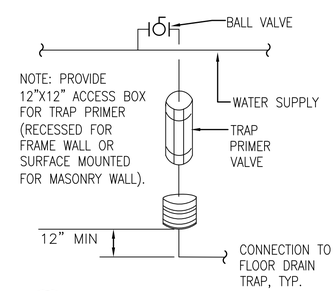

4 / M201 DETAIL: TRAP PRIMER
SCALE: NONE

STATE OF ALASKA 49TH
HELENA BRETAS RUETER
ME-10190
04.28.2022
REGISTERED PROFESSIONAL ENGINEER

MECHANICAL DESIGN AND CONSULTING SERVICES
(907)374-1688
RUETER ENGINEERING
helena@hbrueter.com
P.O. BOX 83585 FAIRBANKS AK 99708

SYMB	DATE	REVISION	BY

PROJECT:
PAKALOLO SUPPLY CO.
ON-SITE CONSUMPTION AREA
1851 FOX AVENUE
FAIRBANKS, ALASKA

SHEET CONTENTS:
MECHANICAL DETAILS

DRAWN		HBR
DRAWN		HBR
CHECKED		HBR
DATE		04/28/2022

SHEET NUMBER:
M201

HBR W.O. NUMBER: 2113

AMCO received 5/14/2022

REQUIRED STATE OF ALASKA MARIJUANA WARNINGS:

3 AAC 306.365

1. Consumption of marijuana in public is prohibited by law.
2. Transportation or carriage of marijuana or marijuana products on Alaska waterways, including cruise ships, or by air carrier is prohibited by federal law.
3. Transportation or shipment of marijuana or marijuana products outside the State of Alaska is prohibited by federal law.
4. Providing marijuana to persons under 21 years of age is prohibited by law.

CONSUMPTION LOUNGE POLICIES

No one under the age of 21 is allowed on the premises in the Retail Store or Lounge.

No Cannabis or Cannabis products may be brought onto the premises from outside.

Only Cannabis purchased in the Lounge may be consumed on the premises, and only in the Lounge area.

No Cannabis purchases from the Retail Store may be taken into the consumption area. Staff will be happy to hold purchases in the store until the customer is ready to exit.

Customer purchases in the Lounge for on-site consumption are limited per day to the following amounts:

- **1 Gram of Cannabis Flower.**
- **25 MG of Cannabis Edibles.**
- **.3 Grams of Cannabis Concentrate contained in a vaping device.**

Customers may not remove unconsumed Cannabis products from the consumption area unless it is packaged by a Pakalolo employee in accordance to State of Alaska regulations. Any Cannabis products left behind, or discarded, will be disposed of in accordance to regulation.

On-site consumption must be done responsibly. Please ask your budtender if you need assistance with calling for a cab or rideshare.

Over consumption of cannabis, or being intoxicated, is not permitted. You may be asked to leave and assisted with calling for a cab or rideshare.

Consuming edibles may take 1 to 2 hours to feel the effects, and can last for several hours. Follow the advice to start low and go slow.

Consumption by inhalation delivers cannabinoids to your system quickly, and effects are felt within a few minutes.

Received by AMCO 8.26.22

AMCO received 5/14/2022

Marijuana is legal in Alaska. Here are some things you need to know.

If you're under 21, it's illegal to use or possess marijuana.

Who is allowed to use marijuana?
Anyone age 21 and older can legally possess or consume marijuana. It is illegal to give marijuana to anyone under the age of 21, unless they have a valid medical marijuana card.

Marijuana can affect people differently.

Know your limits.
Marijuana affects everyone differently based on things like on body type and history of use.

Higher than you might think.

Careful. It can sneak up on you.
These aren't your grandma's brownies — THC levels can be much, much higher in today's marijuana products. And the effects of marijuana can be significantly delayed, particularly with edibles.

You can't drive impaired. Driving high is a DUI.

Don't consume and drive.
Driving while impaired is illegal. It doesn't matter what substance you are using. If you are not sure whether you are impaired, do not drive.

Do not use if you are pregnant or breastfeeding.

Marijuana poses a potential risk to the baby.
Steer clear if you are pregnant or nursing. Marijuana may be harmful to developing brains. Smoking marijuana or consuming edible cannabis products can expose your baby to potentially harmful substances.

Stash it safely away from kids and pets.

Lock it up.
If you have young children or teenagers at home, store your marijuana in a child-resistant container and make it inaccessible to them.

If children accidentally eat or drink marijuana, it can make them very sick. If you suspect your child has consumed marijuana call the poison control hotline at 1-800-222-1222. If someone has a severe reaction after consuming marijuana, call 911 or go to an emergency room right away.

STATE of ALASKA
Department Of Health And Social Services

To learn more visit www.marijuana.dhss.alaska.gov

Summer 2016

AMCO received 5/14/2022

Be Careful With Marijuana Edibles.

Marijuana edibles are

foods and drinks that are made with marijuana or marijuana oils. These can be made at home, like pot brownies, but producers can make and sell edibles in many forms:

- gummy candies
- chocolate
- sodas and juices
- cookies and other treats

Start low...

- Start with a single serving of 10 milligrams (mg) of THC or even less. THC is the chemical in marijuana that makes a person high.
- Check the label and know how many servings are in the package.

And go slow.

- You may feel fine for several hours after consuming a marijuana edible, and then suddenly feel very high.
- Don't eat or drink more of a marijuana product until you have waited at least 2-4 hours.

First time using? Be cautious.

- Eating too much of a marijuana edible too soon may lead to unwanted effects.
- The effects of marijuana will vary person to person, and from one marijuana edible product to another.

MUNICIPALITY OF ANCHORAGE

For more information visit
marijuana.dhss.alaska.gov

AMCO received 5/14/2022

Driving while high is a DUI.
It can take hours for the high from marijuana edibles to develop. If you are impaired and need to get somewhere, do not get behind the wheel. Let someone who is sober drive, or take a bus or cab.

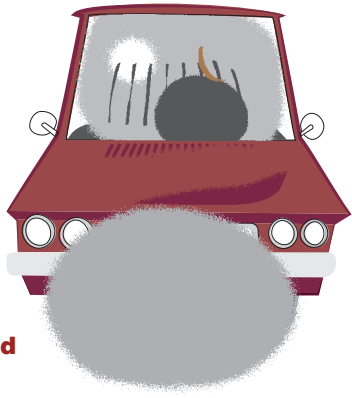

Driving while impaired is illegal and unsafe.

Don't give marijuana to children or anyone under 21 years old.

Steer clear if you are pregnant or breastfeeding.

Using marijuana while pregnant or breastfeeding may harm your baby. THC, the chemical in marijuana that makes a person high, can pass from a mother to an unborn child through the placenta or while breastfeeding. This can potentially affect the baby.

Store your marijuana and marijuana edibles safely.
Lock it up, out of reach. Keep marijuana edibles away from children and pets that could become very sick after consuming them.

If you consumed too much, call for help.
Eating or drinking too much marijuana can cause:

- Confusion, anxiety, panic, or paranoia
- Increased blood pressure
- Fast heart rate
- Nausea and vomiting

POISON Help 1-800-222-1222

If you or someone you know has any of the symptoms above, call the Poison Control Hotline at 1-800-222-1222 for free, fast, expert help anytime