Alcohol and Marijuana Control Office
550 W 7th Avenue, Suite 1600
Anchorage, AK 99501
marijuana.licensing@alaska.gov
https://www.commerce.alaska.gov/web/amco
Phone: 907.269.0350

Alaska Marijuana Control Board

Form MJ-31: Walk-Up or Drive Through Exterior Window Pick-Up Diagram and Operating Plan

Why is this form needed?

This form and your attached diagram is required for all marijuana retail establishment licensees seeking to alter the functional floor plan to include a walk-up or drive-through exterior window at the establishment's existing licensed premises.

There is a $250 application fee which may be made online or by check, cashier's check, or money order.

This form must be completed, submitted to AMCO's Anchorage office, approved by the MCB Board and inspected prior to altering the existing floor plan and/or operating an exterior window.

Section 1 – Establishment Information

Enter information for the business seeking to be licensed, as identified on the license application.

Licensee:	Nome Grown LLC	**MJ License #:**	18545
License Type:	Retail Marijuana Store		
Doing Business As:	Nome Grown LLC		

Section 2 – Required Diagram Information

A new diagram is required with this form. For your security, do not include locations of security cameras, motion detectors, panic buttons, and other security devices. However, AMCO will require full coverage of the walk-up or drive-through exterior window area as required by 3 AAC 306.380(b) and (g).

The following details must be included:

- **License number and DBA**
- **Legend or key**
- **Color coding**
- **Dimensions**
- **Labels**
- **True north arrow**
- **Surveillance room**
- **Licensed premises boundary**
- **Restricted access areas**
- **Storage areas**
- **Entrances, exits, and windows, including walk-up or drive-through exterior window**
- **Walls, partitions, and counters**

Any other areas that must be labeled for specific license types

- **Serving area****
- **Employee monitoring area****
- **Ventilation exhaust points, if applicable****

Items marked with a double asterisks (**) are only required for those retail marijuana establishments that are submitting the MJ-14 form in conjunction with an onsite consumption endorsement application.

AMCO Received 2.5.2024

Alaska Marijuana Control Board

Form MJ-31: Walk-Up or Drive Through Exterior Window Pick-Up Diagram and Operating Plan

Section 3 – Exterior Window Service Operating Plan

Describe how you will comply with the requirements set forth in 3 AAC 306.380 and 3 AAC 306.715. Your response must include include policies and procedures regarding video surveillance, ID verification, display of marijuana or marijuana products, security features including alarm systems and locks, measures to prevent consumers from unlawfully accessing marijuana and funds through the exterior window and licensee control of the area outside of the exterior window.

The exterior pick up window is a 28"w x 48" h window system by Ready Access that has a number of security features built in. Such as tempered glass and a padded hip plunger. By pressing the padded hip plunger, the two door panels conveniently fold inward to open. The two door panels close when the plunger is released automatically and the small 19"w x 18" h service opening ensures that no customer will be able to reach into the window and potentially access marijuana products and/ or funds (see attached Cut Sheet). All required Security features outlined under requirements will be always in place such as camera coverage inside and outside of the exterior pick up window and additional exterior lighting as needed. All drive through customers will have to provide government issued photo identification, verifying that the customer is 21 years of age or older, prior to even receiving a menu. All identification verification will be clearly captured on video surveillance. Cameras will be checked prior to sale to ensure that Nome Grown LLC knows how many people are in the vehicle and to ensure that no underage person is in the vehicle unless the underage person is the consumers own child, grandchild, or ward who is not older than seven years of age and/or otherwise required by local or state law to be seated in a car seat or booster seat (or as outlined in the regulations if updated in the future). When the drive through window is available for public use, it will be manned at all times. The drive through area of the building will not have any display cases and will only supply pre-packaged marijuana concentrates, edibles and flower which will be locked in a secured storage area under video surveillance. All required signage such as: Restricted Access Area: Visitors Must Be Escorted" will be posted at the restricted area access points. The required consumer notices will be posted on the exterior of the building leading up to the exterior pick-up window. Additional signage on the exterior of the building leading up to the pick up window will state "No persons under the age of 21 years old past this point". Marijuana and marijuana products purchased at the exterior window will be placed in fully opaque and child-resistant packaging before being handed to a customer and will follow the labeling and limits on quantity sold as outlined in the regulations. Additional training in intoxicating substance detection will be provided to staff by the licensee who is a highly trained drug and alcohol addiction health provider whom, as an adjunct faculty of UAF, has the knowledge and training to create protocols and procedures to his staff.

Section 4 – Declarations

Read each statement below, and then sign your initials in the corresponding box to the right [if applicable]:	Initials
If a local building permit is required, I have attached a copy of it to this form.	
The proposed changes conform to all applicable public health, fire, and safety laws.	
I have included a title, lease or other documentation showing sole right of possession to the additional area(s), including the exterior window area, if the additional area(s) are not already part of my approved licensed premises.	
I certify the area immediately outside the walk-up or drive-through exterior window does not include any public property including public streets, public sidewalks, or public parking lots.	
I certify I have read, understood and will comply with all requirements set forth in 3 AAC 306.380, 3 AAC 306.715 and 3 AAC 306.720.	
I hereby certify that I am the person herein named and subscribing to this application and that I have read the complete application, and I know the full content thereof. I declare that all of the information contained herein, and evidence or other documents submitted are true and correct. I understand that any falsification or misrepresentation of any item or response in this application, or any attachment, or documents to support this application, is sufficient grounds for denying or revoking a license/permit. I further understand that it is a Class A misdemeanor under Alaska Statute 11.56.210 to falsify an application and commit the crime of unsworn falsification.	

Gregory T. Smith
Printed Name of licensee

Signature of licensee

License # 18545

AMCO Received 2.5.2024

Alaska Marijuana Control Board

Form MJ-31: Walk-Up or Drive Through Exterior Window Pick-Up Diagram and Operating Plan

Section 5 – Approvals

Local Government Review is required to be completed before submission to the Alcohol and Marijuana Control Office.

Local Government Review (to be completed by an appropriate local government official):	Yes	No	Pending
The proposed changes shown on this form conform to all local restrictions and laws.	☑	☐	☐
A local building permit is required for the proposed changes.	☑	☐	

Cliff McHenry — Signature of local government official

23-000140R — Building Permit #

1/30/2024 — Date

CLIFF McHENRY — Printed name of local government official

Nome Building Inspector — Title

Section 6 – AMCO Review

AMCO Review:	Approved	Disapproved
	☐	☐

Signature of Director

Printed Name of Director

Date

Final Inspection:	Approved	Disapproved
	☐	☐

Signature of Enforcement Investigator

Printed Name of Enforcement Investigator

Date

AMCO Comments:

AMCO Received 2.5.2024

BUMP OUT 2

Bi Parting Window

BUMP OUT 2 (BO2)

Classic bump out design offers a panoramic view of cars and outside activity while adding architectural interest. It's narrow profile design fits almost any building layout with a large 19"w x 18"h pass thru opening.

Half height door design acts as built in sneeze guard, and offers protection from extreme weather.

CHOOSE YOUR MODE OF OPERATION

◊ SEMI AUTOMATIC (BO2-SEMI)

By pressing the padded hip plunger, the two door panels conveniently fold inward from the exterior edges, without interfering with the staging area on the interior shelf. The two door panels close when the plunger is released. Economical and easy to maintain.

◊ FULLY AUTOMATIC ELECTRIC (BO2E)

For hands free operation, the operator simply steps into a hip high electronic light beam which opens the door panels automatically. The door panels automatically close when the operator steps away.

SIZE

Window Frame Size: 27-3/4"w x 48-3/4"h

Service Opening: 19"w x 18"h service opening

Rough Opening for Recess Mounting: 28-1/4"w x 49 1/4"h

STANDARD FEATURES:

- ◊ Anodized aluminum extrusions and stainless steel combine to give you an attractive window that will not rust, pit or weather
- ◊ Fully assembled, pre-glazed and ready to install
- ◊ 1/4" Clear Tempered Glass doors/sides
- ◊ Dark Bronze or Clear Anodized Aluminum
- ◊ Track free bottom sill with usable counter space
- ◊ One year parts & labor limited warranty
- ◊ On-staff tech support / stocked parts / nationwide network of service providers.

OPTIONAL FEATURES

- ◊ Powder Coat Paint—Tiger Drylac
- ◊ Tinted Glazing
- ◊ 1/4" Hard Coat Low E Glass
- ◊ Telescoping Night Time Security Bar Set for additional security

1815 Arthur Drive West Chicago, IL 60185 800.621.5045 630-876-7766 (fax) 630.876.7767

www.ready-access.com email: ready@ready-access.com

AMCO Received 2.5.2024

BUMP OUT 2

Bi Parting Window

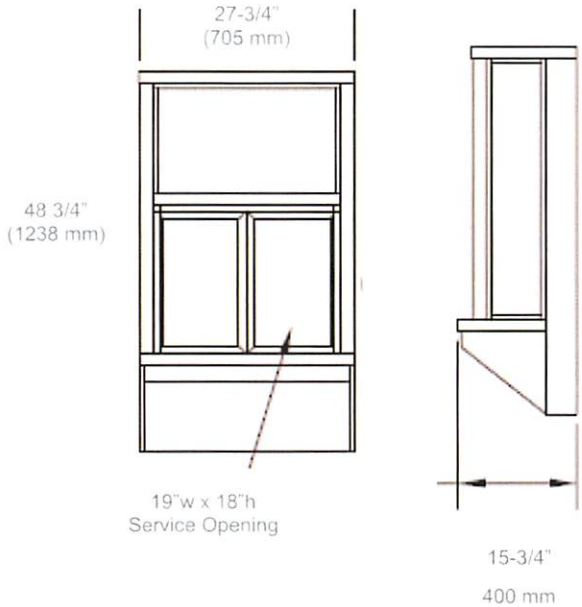

All windows ship completely pre-assembled, fully glazed and ready to install.

Installation / Owners manual can be retrieved online:
www.ready-access.com

- Installation illustrations are for reference only. Construction conditions and local codes prevail.
- Must be installed level, square and plumb.
- Recommend approximately 36" from top of sill to interior finished floor (or per local code).
- Recess Mount: 28-1/4"w x 49-1/4"h rough opening recommended for recess-mount application (most common). Projects approximately 11-3/4".
- Surface Mount Option: Optional surface mount hardware included for 24-1/4"w x 34-1/2"h rough opening. Projects approximately 15-3/4".

RECESS MOUNTING

(most common)
Rough Opening
28-1/4"w x 49-1/4"h
Set 23 1/4" from
interior finished floor
for 36" interior counter height.
(Local codes prevail)

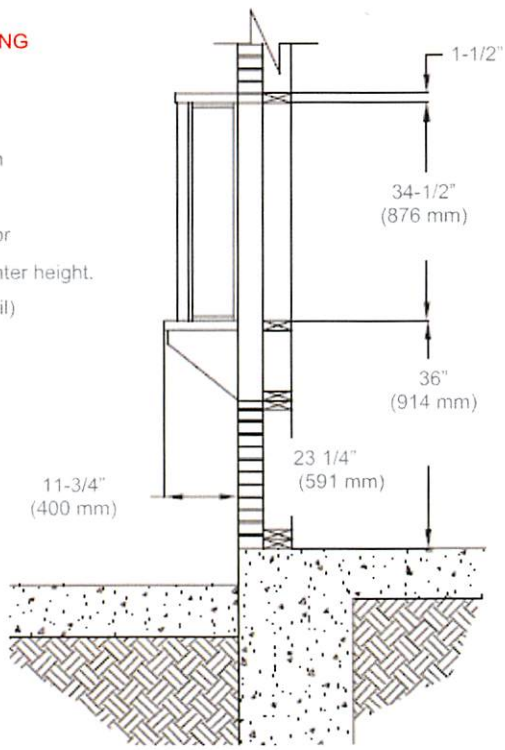

ELECTRIC REQUIREMENTS FOR WINDOW

Manual Open / Self Close Window:

No Power Required

Fully Automatic Electric:

115 vac—60Hz with a 15 amp dedicated circuit
Run power to bottom right (from outside view)

Doors flip in from outside edges so counter work area remains clear.

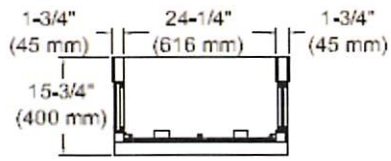

1815 Arthur Drive West Chicago, IL 60185 800.621.5045 630-876-7766 (fax) 630.876.7767
www.ready-access.com email: ready@ready-access.com

AMCO Received 2.5.2024

No: 23-000140 R

CITY OF NOME

Building/Remodeling Permit

Block No: 25 Lot No: 4

Date Issued 12/13/23 Date Expired 12/13/25

Inspection No: ..... Inspection No: .....

Inspection No: ..... Inspection No: .....

Inspection No: ..... Inspection No: .....

AMCO Received 2.5.2024

City of Nome, AK

Remodel Permit

#23-000140

Project Description: Move exterior door to a new location and replace with window (as depicted on attached drawing). Add a security fence (5' 6"H) between buildings as highlighted on attached property survey

Issued on: 12/13/2023 at 3:09 PM by: Jeremy Jacobson

ADDRESS
605 W 2nd Ave
Nome, AK 99762

LEGAL
Nome Townsite (uss 451) Blk 25 Lot 04

PERMIT HOLDER
GREGORY SMITH

COLLABORATORS
- GREGORY SMITH

OWNERS
- Moose 605 2nd Llc Red

INSPECTIONS 12

1. Footings Inspection
2. Foundation Inspection
3. Framing Rough-In Inspection
4. Electrical Rough-In Inspection
5. Plumbing Rough-In Inspection
6. Mechanical Rough-In Inspection
7. Insulation & Vapor Barrier Inspection
8. 1 hr Sheet Rock Inspection
9. Electrical Final Inspection
10. Plumbing Final Inspection
11. Mechanical Final Inspection
12. Exterior (Hand Rails & Stairs) Inspection

INFORMATION FIELDS

Project Type:	**Accessory**
Property Owner Information:	
Property Owner	Gregory Smith
Property Owner Business Name	Red Moose 605 2nd LLC
Property Owner Phone #	**(907) 304-2191**
Property Owner Address	306 W 2nd Ave, Nome, AK, 99762
Property Owner Email	**gsmithnome@gmail.com**
Property Owner Mailing Address	PO Box 808, Nome, AK, 99762
Legal Address Information:	
Block	25
Lot	4
Subdivision	Nome Townsite
Plat Number	
Tax Parcel ID	001.281.32
Zoning District	General Use
Estimated Start Date	**11/01/2023**
Estimated Completion Date	**11/21/2023**
Sewer?	**No**
Septic?	**No**
SOA File #	
# of Approved Bedrooms	

AMCO Received 2.5.2024

INFORMATION FIELDS

Total Square Footage of Project	0
Floor Area Square Of Project:	
Existing	**0**
Proposed	**0**
Occupancy/Use:	**Other**
Contractor Information:	
Contractor Name	Red Moose Enterprises
Contractor Phone #	**(907) 304-2191**
State of Alaska License #	912700
Contractor Email Address	**redmoosenome@gmail.com**
Contractor Address	PO Box 808
Electrical Contractor Information:	
Electrical Contractor Name	
Electrical Contractor Phone #	-
Electrical Contractor Email Address	
Electrical Contractor Address	
Electrical Contractor State of Alaska License #	
Architect/Engineer Information:	
Architect/Engineer Name	
Architect/Engineer Phone #	-
Architect/Engineer Email Address	
Architect/Engineer Address	
Architect/Engineer State of Alaska License #	
Plumbing Contractor Information:	
Plumbing Contractor Name	
Plumbing Contractor Email Address	
Plumbing Contractor Phone #	-
Plumbing Contractor Adress	
Plumbing Contractor State of Alaska License #	
Cost of Construction	**$ 1,000.00**
Fire Marshall Approved Permit #	
Upload: Proxy Statement	
Total Valuation	**$ 2,500.00**
Upload: Drawing	11.21.23 NG Building Permit.pdf

AMCO Received 2.5.2024

INFORMATION FIELDS

Upload: Drawings of All Work Being Done	11.21.23 NG Building Permit.pdf
Upload: Drawings/Maps	11.21.23 NG Google Maps screen shot.pdf
Contractor Name	Greg Smith
Owner Name	Gregory Smith
Name of Business	Red Moose Enterprises
Name	Red Moose Enterprises
Company Name	Red Moose Enterprises
Business Name	Red Moose Enterprises
State of AK. Business Lic. #	912700
State of AK. Business Lic. # Applied for?	**No**

The granting of this permit does not presume to give authority to violate or cancel the provisions of City, State, or other local laws regulating construction or the performance of construction. All provisions, laws, and ordinances governing this type of work shall be complied with, whether specified or not and shall be enforced at any and all times.

AMCO Received 2.5.2024

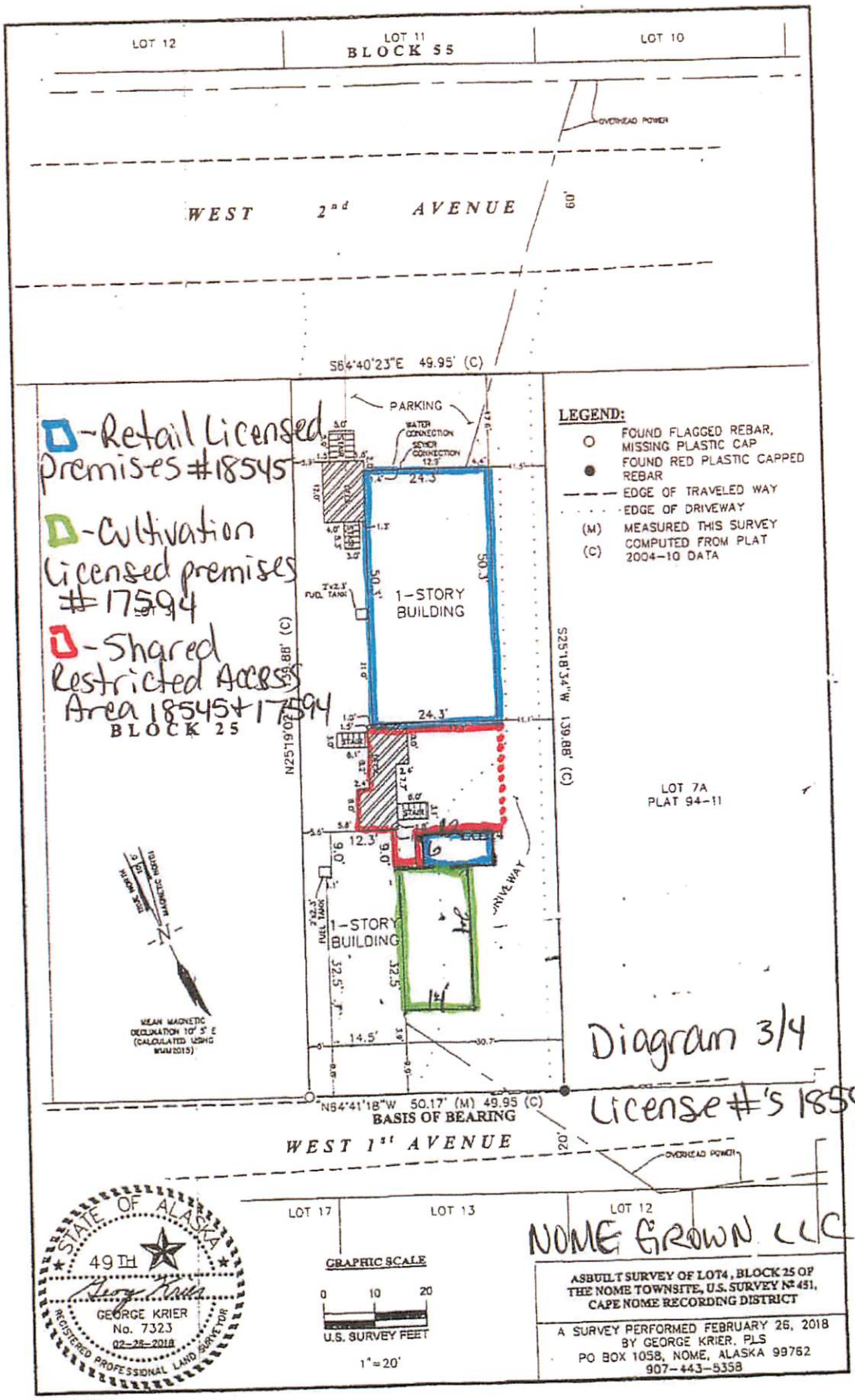

AMCO Received 2.5.2024

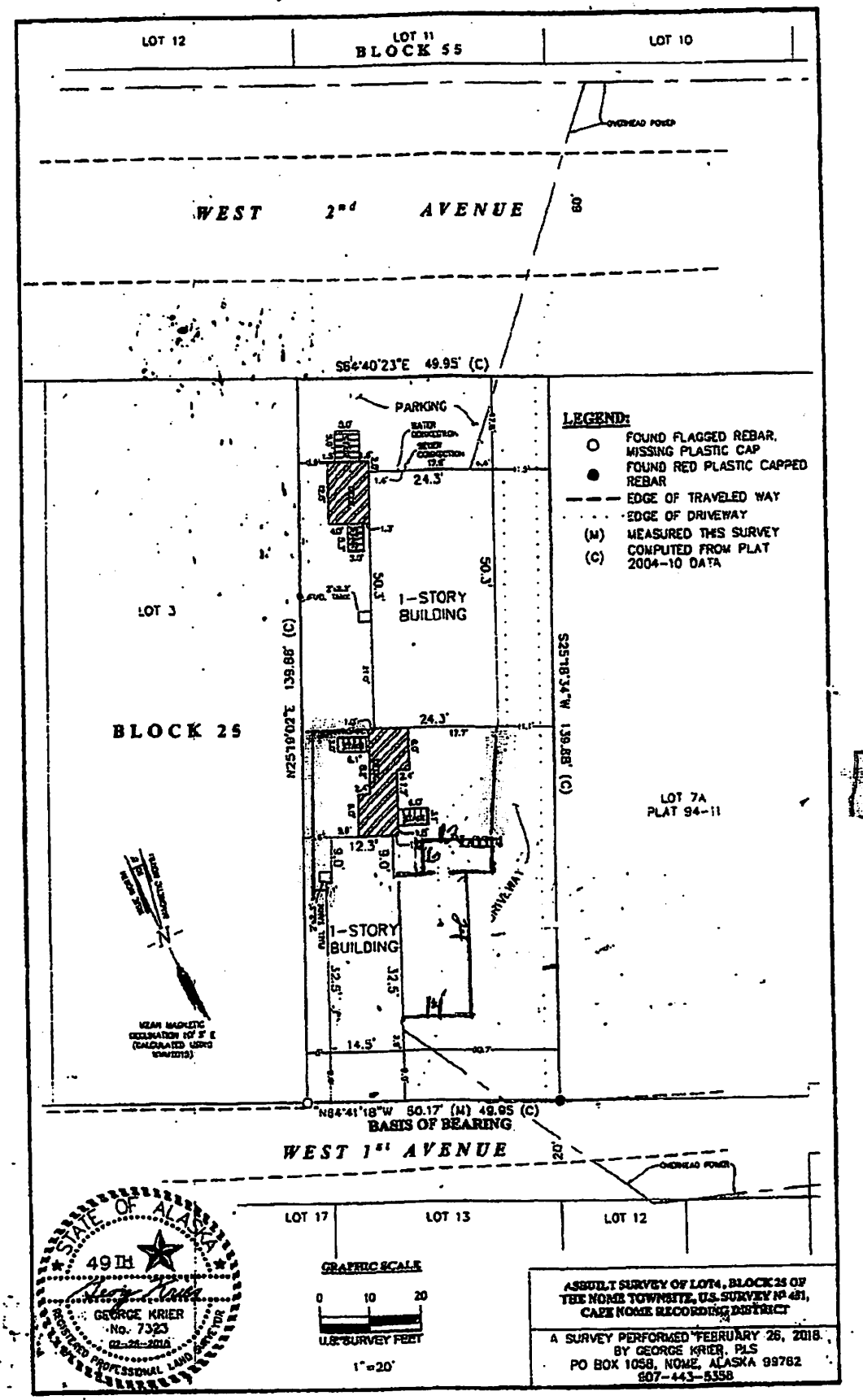

New 5'5" Fence Connecting Buildings

AMCO Received 2.5.2024

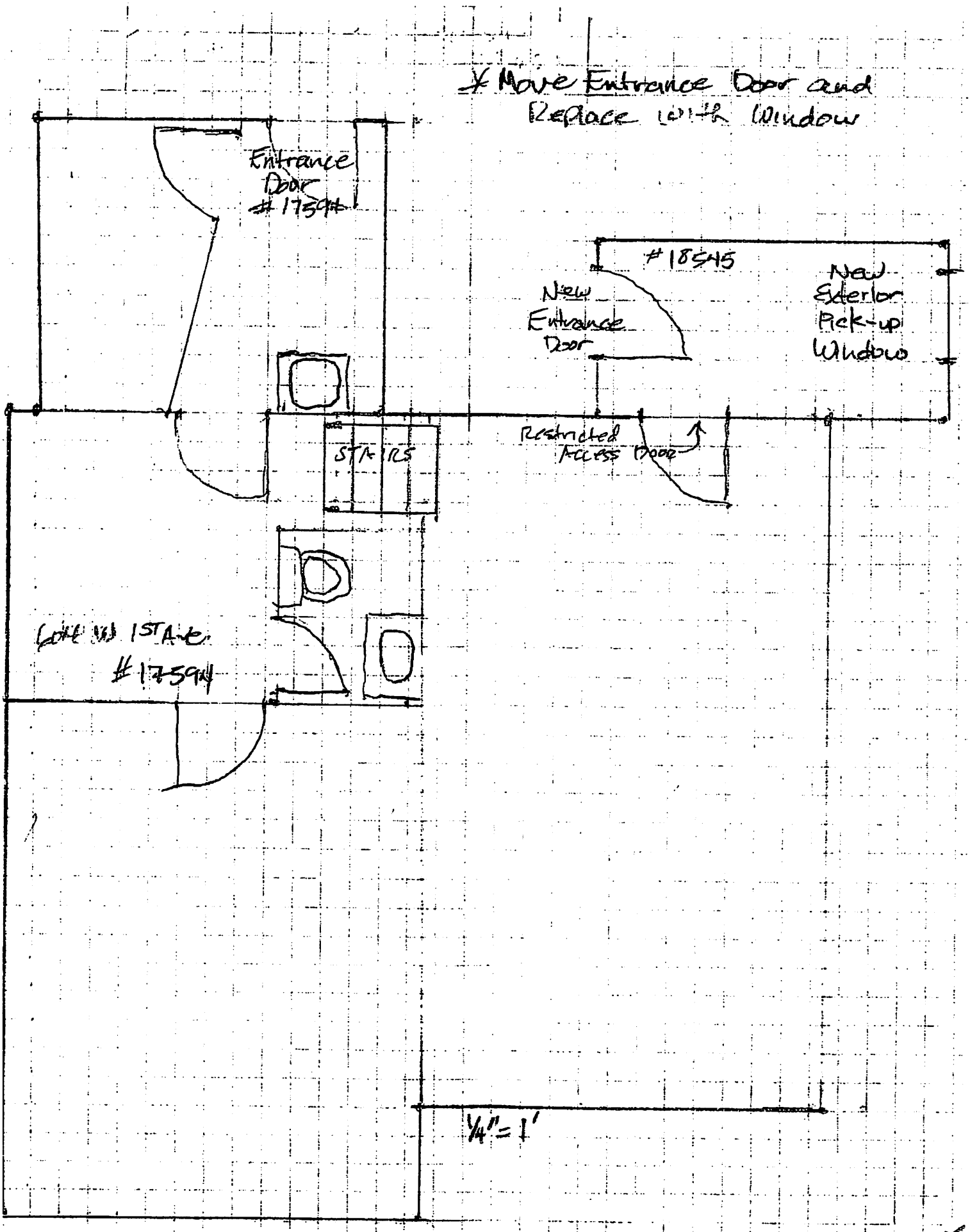

AMCO Received 2.5.2024